Addendum No. 3 to the Environmental Impact Report on the

American River Watershed Common Features Project/ Natomas Post-authorization Change Report/ Natomas Levee Improvement Program, Phase 4b Landside Improvements Project

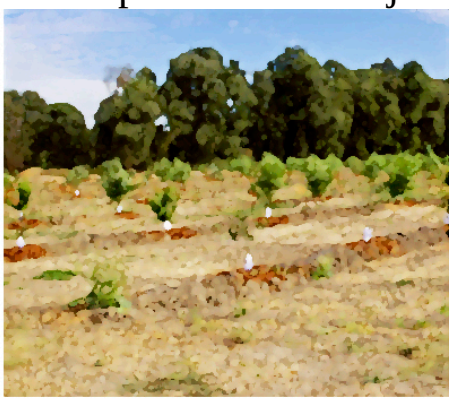

State Clearinghouse No. 2009112025

Sacramento Area Flood Control Agency

December 13, 2018

Addendum No. 3 to the Environmental Impact Report on the American River Watershed Common Features Project/ Natomas Post-authorization Change Report/ Natomas Levee Improvement Program, Phase 4b Landside Improvements Project

State Clearinghouse No. 2009112025

Lead Agency:

Sacramento Area Flood Control Agency
1007 7th Street, 7th Floor
Sacramento, CA 95814
Contact: John Bassett, P.E.
Director of Engineering
(916) 874-7606

Non-Federal Sponsor:

State of California – The Resources Agency
Central Valley Flood Protection Board
3310 El Camino Ave., Rm. LL40
Sacramento, CA 95821
Contact: Dan Fua
Supervising Engineer
(916) 574-0698

Prepared by:

AECOM
2020 L Street, Suite 400
Sacramento, CA 95811
Contact: Richard Hunn
Project Manager
(916) 414-5800

December 13, 2018

TABLE OF CONTENTS

Section **Page**

1 INTRODUCTION 1

2 SUMMARY OF PREVIOUS ENVIRONMENTAL REVIEW PROCESS 3

3 DESCRIPTION OF PHASE 4B OF THE NLIP/NBP AND THE REACH H CONSTRUCTION PROJECT 7

4 CHANGES TO THE REACH H CONSTRUCTION PROJECT 10
4.1 Construction Schedule 10
4.2 Traffic Control Measures 10
4.3 Recreation Access During Construction 11
4.4 Mitigation Areas for Tree Loss/Removal 12
4.5 Specific Design Features 12
4.5.1 Cutoff Walls 12
4.5.2 Stability Berm/Seepage Berm 13
4.5.3 City of Sacramento Water Main 13
4.5.4 Landside Patrol Road 13
4.5.5 Seepage Relief Wells 13
4.5.6 Residential Structure Demolition 13
4.5.7 Right of Way Fence Relocation 14
4.6 Staging Areas, Borrow Sites, and Disposal Sites 14
4.6.1 Staging Areas 14
4.6.2 Borrow Sites 14
4.6.3 Disposal Sites 15

5 STANDARD FOR ADOPTION OF A CEQA ADDENDUM 16
5.1 Issues Not Analyzed Further in this Addendum 18
5.2 Issues Carried Forward for Further Analysis in This Addendum 18
5.2.1 Aquatic and Terrestrial Biological Resources 18
5.2.2 Cultural and Paleontological Resources 20
5.2.3 Recreation Resources 21
5.2.4 Transportation and Traffic 22
5.2.5 Air Quality 23
5.2.6 Hydrology and Hydraulics 25
5.2.7 Land Use, Socioeconomics, and Population and Housing 25

6 CONCLUSION 27

7 REFERENCES 28

TABLE OF CONTENTS

Section **Page**

Appendices

Appendix A. Plates
Appendix B.
B1 –USFWS Consultation
B2– Updated CNDDB Inventory
Appendix C. Emission Estimates for the Reach H Construction Project

Figures

Figure 1-1. NLIP/NBP Area....2
Figure 3-1. Reach H Construction Project Area....9

Tables

Table 2-1 Summary of Natomas Levee Improvement Program CEQA Documentation....5
Table 6-1. Total Maximum Daily Emissions for the Reach H Construction Project....24
Table 6-2. Total Maximum Daily Emissions for Concurrent Construction of Reach H and Reach I Construction Projects....24

ACRONYMS AND OTHER ABBREVIATIONS

APN	Assessor's Parcel Number
ARCF-PA	American River Common Features project programmatic agreement
CB	cement-bentonite
CDFW	California Department of Fish and Wildlife
CEQA	California Environmental Quality Act
CNDDB	California Natural Diversity Database
CVFPB	Central Valley Flood Protection Board
cy	cubic yard(s)
EIR	environmental impact report
EIS	environmental impact statement
I-80	Interstate 80
lb/day	pounds per day
MFR	Memorandum for Record
MMRP	Mitigation Monitoring and Reporting Program
N/A	not applicable
NBP	Natomas Basin Project
NCC	Natomas Cross Canal
NEMDC	Natomas East Main Drainage Canal
NEPA	National Environmental Policy Act
NLIP	Natomas Levee Improvement Program
NLIP PA	Natomas Levee Improvement Program programmatic agreement
NO_X	oxides of nitrogen
NRHP	National Register of Historic Places
PG&E	Pacific Gas & Electric Company
PGCC	Pleasant Grove Creek Canal
PM_{10}	particulate matter with an aerodynamic diameter of 10 micrometers or less
$PM_{2.5}$	fine particulate matter with an aerodynamic diameter of 2.5 micrometers or less
RD	Reclamation District
ROG	reactive organic gases
SAFCA	Sacramento Area Flood Control Agency
SB	soil/bentonite
SCB	soil-cement-bentonite
SCCB	slag cement cement bentonite
SHPO	State Historic Preservation Officer
SMAQMD	Sacramento Metropolitan Air Quality Management District
SRA	shaded riverine aquatic
USACE	U.S. Army Corps of Engineers
USFWS	U.S. Fish and Wildlife Service

1 INTRODUCTION

The Sacramento Area Flood Control Agency (SAFCA) is implementing the Natomas Levee Improvement Program (NLIP). The NLIP is a cooperative effort by the U.S. Army Corps Engineers (USACE), Central Valley Flood Protection Board (CVFPB), and SAFCA to address seepage and stability issues for approximately 42 miles of levees surrounding the Natomas Basin.

The NLIP consists of multiple development phases and individual levee improvement projects whose environmental impacts were previously identified and considered in several environmental documents. Phases 1 through 4a of the NLIP underwent separate environmental impact reviews from 2007 through 2009. The Phase 4b Project, the final subphase of the NLIP, consists of improvements to the remaining portions of the Natomas Basin's perimeter levee system, associated modifications to landscape and irrigation/drainage infrastructure, and habitat creation and management measures.

Phase 4b of the NLIP was previously addressed in the *Final Environmental Impact Statement and Environmental Impact Report on the American River Common Features Project/Natomas Post-Authorization Change Report/Natomas Levee Improvement Program, Phase 4b Landside Improvements Project* (State Clearinghouse No. 2009112025) (USACE and SAFCA 2010). This document is referenced in this addendum as the 2010 Final Environmental Impact Statement/Environmental Impact Report (2010 Final EIS/EIR).

In June 2014, Congress authorized the Water Resources Reform and Development Act, including the American River Watershed Project Natomas Basin improvements, known as the Natomas Basin Project (NBP), which directs the USACE to continue the work on the NLIP/NBP Landside Improvements Project. The NLIP/NBP is located on lands in Sacramento and Sutter counties (Figure 1-1).

On August 16, 2016, the CVFPB and SAFCA entered into the Local Project Partnership Agreement. On August 18, 2016, the U.S. Department of the Army, the State of California, and SAFCA entered into the Project Partnership Agreement. These agreements set forth the roles and responsibilities for each partner as the Natomas Basin Project advances.

This addendum evaluates the revised Phase 4b Landside Improvements Project Reach H Construction Project, and presents substantial evidence which demonstrates that the proposed changes to the approved project would not result in new or substantially more severe significant environmental effects than those identified in the 2010 Final EIS/EIR.

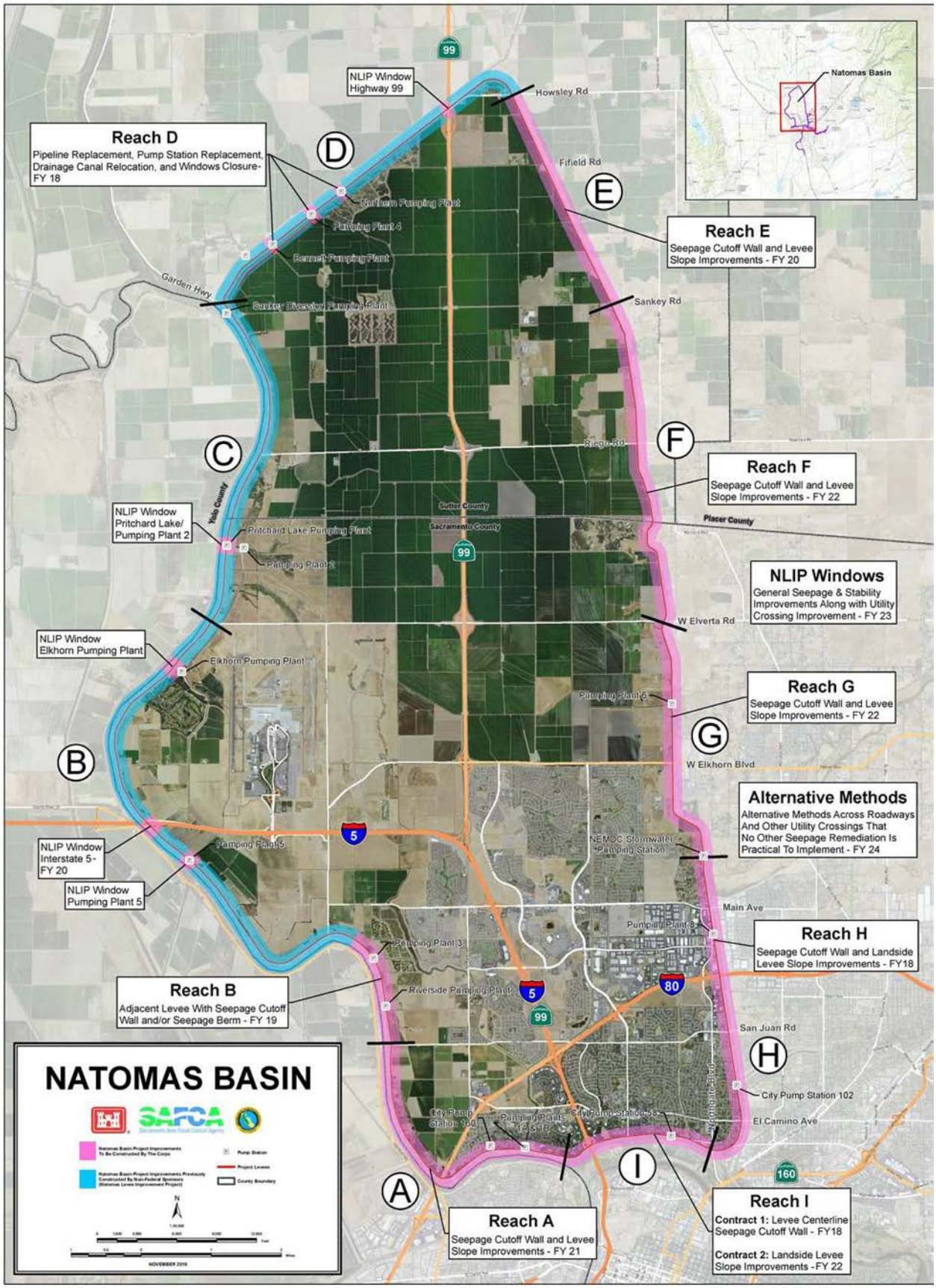

Figure 1-1. NLIP/NBP Area

2 SUMMARY OF PREVIOUS ENVIRONMENTAL REVIEW PROCESS

As stated in Section 1, "Introduction," USACE and SAFCA completed an environmental review of Phase 4b of the NLIP/NBP in 2010 in accordance with the requirements of the National Environmental Policy Act (NEPA) and the California Environmental Quality Act (CEQA), respectively (USACE and SAFCA 2010). A draft EIS/EIR was prepared and distributed for public and agency review and comment, in accordance with NEPA and CEQA requirements. The review period began on July 2, 2010, and closed on August 16, 2010.

The 2010 Draft EIS/EIR addressed a full range of environmental topics and identified measures to avoid, eliminate, or minimize potentially significant adverse environmental impacts. The 2010 Draft EIS/EIR found that implementing Phase 4b of the NLIP/NBP would result in various significant and unavoidable adverse impacts, including:

- conversion of Important Farmland to nonagricultural uses;
- conflicts with lands under Williamson Act contracts;
- inconsistency with the Airport Master Plan, Airport Comprehensive Land Use Plan, and Airport Wildlife Hazard Management Plan;
- inconsistency with the American River Parkway Plan and Wild and Scenic Rivers Act;
- potential to physically divide or disrupt an established community;
- loss of landside and waterside woodland and shaded riverine aquatic habitats;
- disruption to and loss of existing wildlife corridors;
- impacts on Swainson's hawk and other special-status birds;
- potential damage or disturbance to known archaeological or architectural resources from ground disturbance or other construction-related activities;
- potential damage to or destruction of previously unidentified or undiscovered cultural resources from ground disturbance or other construction-related activities;
- potential discovery of human remains during construction;
- temporary and short-term increases in traffic on local roadways;
- temporary and short-term increases in traffic hazards on local roadways;
- generation of temporary and short-term construction noise;
- temporary and short-term exposure of residents to increased traffic noise levels from truck hauling associated with borrow activity;
- effects related to the proposed Natomas Levee Class 1 Bike Trail Project (short term: significant and unavoidable; long term: less than significant [beneficial]);
- permanent disruption of recreational activities and facilities;

- alteration of scenic vistas, scenic resources, and the existing visual character of the project area;
- new sources of light and glare that would adversely affect views; and
- aircraft safety hazards resulting from project implementation.

The 2010 Final EIS/EIR presented written responses to comments received on the 2010 Draft EIS/EIR, as well as corrections, revisions, additions, and/or deletions to the text of the Draft EIS/EIR. The 2010 Final EIS/EIR was completed on October 22, 2010. Measures to avoid, eliminate, or minimize potentially significant adverse environmental impacts identified in the 2010 Draft EIS/EIR were included in a mitigation monitoring and reporting program (MMRP). SAFCA certified the 2010 Final EIS/EIR, adopted findings, adopted and incorporated the mitigation measures into the project, adopted the associated MMRP, and approved Phase 4b of the NLIP/NBP on November 12, 2010. The Draft and Final EIS/EIR are available at SAFCA's offices at 1007 7th Street, 7th Floor, Sacramento, CA 95814, and online at SAFCA's Web site: www.safca.org/protection/Environmental_Public_Review.html.

After completion of the 2010 Final EIS/EIR and Federal authorization in 2014, the design of the projects within the NLIP/NBP were refined and updated as part of the preconstruction engineering and final design phases. The proposed design changes analyzed in this addendum consist of several actions affecting the Reach H Construction Project. These changes are described further in Section 4 of this addendum.

SAFCA prepared Addendum No. 1 to the 2010 Final EIS/EIR in 2018 (SAFCA 2018a). Addendum No. 1 (April 2018) addressed proposed changes to the proposed construction planned for Reach D on the Natomas Cross Canal (NCC) South Levee. Those proposed modifications and refinements included removal of the Bennett and Northern Main Pumping Plants, improvements at Pumping Plant No. 4, relocation of the Vestal Drain, and adjustments to access and staging areas. Addendum No. 1 concluded that implementation of the proposed modifications and refinements would not require major revisions to the 2010 Final EIS/EIR or additional mitigation measures, because no new or substantially more severe significant environmental impacts would result.

SAFCA also prepared Addendum No. 2 to the 2010 Final EIS/EIR in 2018 (SAFCA 2018b). Addendum No. 2 addressed modifications to the proposed construction planned for Reach I on the American River North Levee. Those proposed modifications and refinements included adding modifications at City Sump 58; use of slag cement-cement-bentonite (SCCB) backfill to construct cutoff walls; additional details of staging areas, and borrow and disposal sites; traffic control; and recreational access to the Project.

In accordance with NEPA, USACE recently completed an environmental impact analysis of the proposed changes planned for Reach H on the Natomas East Main Drainage Canal West Levee, and published its conclusions in two Memorandum for Record (MFR) documents, issued in 2017 and 2018. These analyses concluded that the proposed changes to the project implementation schedule or design would not increase the severity or intensity of impacts related to transportation and circulation, recreation, biological resources, air quality, or cultural resources from those effects described in the 2010 Final EIS/EIR. The MFRs also found that mitigation measures were already adopted to minimize the potential adverse effects and no new mitigation measures are required (USACE 2017, 2018).

Table 2-1 lists the CEQA documents addressing the various phases of the NLIP. In addition, the table identifies the prior documents that relate to the proposed project changes.

Table 2-1 Summary of Natomas Levee Improvement Program CEQA Documentation

Document Title	Proposed Project Change
Environmental Impact Report on Local Funding Mechanisms for Comprehensive Flood Control Improvements for the Sacramento Area. (2007 Landside EIR) SCH 2006072098 (February 2007) Landside Improvements Project. SCH 2009112025 (October 2010)	Not related to proposed project changes analyzed in this Addendum.
Environmental Impact Report on the Natomas Levee Improvement Program Landside Improvements Project. (Phase 2) SCH 2007062016 (November 2007)	Not related to proposed project changes analyzed in this Addendum.
Supplement to the Environmental Impact Report on the Natomas Levee Improvement Program Landside Improvements Project—Phase 2 Project. SCH 2007062016. (January 2009)	Not related to proposed project changes analyzed in this Addendum.
Addendum to the Environmental Impact Report on the Natomas Levee Improvement Program, Landside Improvements Project – Phase 2 Project. SCH 2007062016 (June 2009)	Not related to proposed project changes analyzed in this Addendum.
2nd Addendum to the Environmental Impact Report on the Natomas Levee Improvement Program, Landside Improvements Project – Phase 2 Project. SCH 2007062016 (August 2009)	Not related to proposed project changes analyzed in this Addendum.
Supplemental Environmental Impact Report No. 2 for the Natomas Levee Improvement Program Landside Improvements Project (Phase 2) SCH 2007062016 (October 2012)	Not related to proposed project changes analyzed in this Addendum.
Environmental Impact Report on the Natomas Levee Improvement Program Phase 3 Landside Improvements Project. SCH 2008072060 (May 2009)	Not related to proposed project changes analyzed in this Addendum.
Addendum to the Environmental Impact Report on the Natomas Levee Improvement Program, Landside Improvements Program Phase 3 Landside Improvements Project. SCH 2008072060 (September 2009)	Not related to proposed project changes analyzed in this Addendum.
2nd Addendum to the Environmental Impact Report on the Natomas Levee Improvement Program, Landside Improvements Program Phase 3 Landside Improvements Project. SCH 2008072060 (August 2011)	Not related to proposed project changes analyzed in this Addendum.
3rd Addendum to the Environmental Impact Report on the Natomas Levee Improvement Program, Landside Improvements Program Phase 3 Landside Improvements Project. SCH 2008072060 (July 2014)	Not related to proposed project changes analyzed in this Addendum.
4th Addendum to the Environmental Impact Report on the Natomas Levee Improvement Program, Landside Improvements Program Phase 3 Landside Improvements Project. SCH 2008072060 (May 2017)	Not related to proposed project changes analyzed in this Addendum.
Environmental Impact Report on the Natomas Levee Improvement Program Phase 4a Landside Improvements Project. SCH 2009032097 (November 2009)	Not related to proposed project changes analyzed in this Addendum.
Addendum to the Environmental Impact Report on the Natomas Levee Improvement Program, Phase 4a Landside Improvements Project. SCH 2009032097 (February 2011)	Not related to proposed project changes analyzed in this Addendum.
2nd Addendum to the Environmental Impact Report on the Natomas Levee Improvement Program, Phase 4a Landside Improvements Project. SCH 2009032097 (April 2012)	Not related to proposed project changes analyzed in this Addendum.

Document Title	Proposed Project Change
3rd Addendum to the Environmental Impact Report on the Natomas Levee Improvement Program, Phase 4a Landside Improvements Project. SCH 2009032097 (July 2012)	Not related to proposed project changes analyzed in this Addendum.
4th Addendum to the Environmental Impact Report on the Natomas Levee Improvement Program, Phase 4a Landside Improvements Project. SCH 2009032097 (March 2015)	Not related to proposed project changes analyzed in this Addendum.
5th Addendum to the Environmental Impact Report on the Natomas Levee Improvement Program, Phase 4a Landside Improvements Project. SCH 2009032097 (November 2018)	Not related to proposed project changes analyzed in this Addendum.
Environmental Impact Statement/Final Environmental Impact Report on the American River Watershed Common Features Project/Natomas Post-authorization Change Report/Natomas Levee Improvement Program, Phase 4b SCH 2009112025 (October 2010)	Analyzed construction of cutoff walls in Reach I using cement-bentonite (CB), soil-cement-bentonite (SCB) or soil-bentonite (SB) backfill as seepage remediation in Reach I. Project modifications and refinements include use of SCCB in cutoff walls and use of a drainage blanket as a seepage remediation. Analyzed levee and roadway raise and replacement of discharge pipes at City Sump 58. Project modifications and refinements include replacement of discharge pipes without requiring Garden Highway to be raised. Analyzed material hauling on various project roadways. Project modifications and refinements include overall reductions in the number of truck trips, and adjustments to hauling, including transporting excess soil from Reach I to Reach 19A and the Hewitt site. Analyzed use of borrow material for improvements in Reach I. Project modifications and refinements no longer require local soil borrow. Analyzed staging areas, including Discovery Park. Project modifications and refinements include additional detail concerning staging areas, and potential use of Reach 19A or Hewitt site for staging. Analyzed temporary closure of Garden Highway during construction. Modifications and refinements include additional lane closures on Garden Highway.
Addendum to the Environmental Impact Report on the American River Watershed Common Features Project/Natomas Post-authorization Change Report/Natomas Levee Improvement Program, Phase 4b Landside Improvements Project. SCH 2009112025 (April 2018)	Addressed proposed changes to the proposed construction planned for Reach D on the Natomas Cross Canal (NCC) South Levee. Those proposed modifications and refinements included removal of the Bennett and Northern Main Pumping Plants, improvements at Pumping Plant No. 4, relocation of the Vestal Drain, and adjustments to access and staging areas
2nd Addendum to the Environmental Impact Report on the American River Watershed Common Features Project/Natomas Post-authorization Change Report/Natomas Levee Improvement Program, Phase 4b Landside Improvements Project. SCH 2009112025 (September 2018)	Addressed modifications to the proposed construction planned for Reach I on the American River North Levee. Those proposed modifications and refinements included adding modifications at City Sump 58; use of slag cement-cement-bentonite (SCCB) backfill to construct cutoff walls; additional details of staging areas, and borrow and disposal sites; traffic control; and recreational access to the Project

3 DESCRIPTION OF PHASE 4B OF THE NLIP/NBP AND THE REACH H CONSTRUCTION PROJECT

As described in the 2010 Final EIS/EIR, Phase 4b of the NLIP/NBP is divided into nine reaches (Reaches A–I), as shown in Figure 1-1. In the figure, lettered reaches follow the USACE designation, as listed below.

- Sacramento River east levee: Reach A
- Sacramento River east levee: Reach B
- Sacramento River east levee: Reach C
- Natomas Cross Canal (NCC): Reach D
- Pleasant Grove Creek Canal (PGCC): Reach E
- Natomas East Main Drain Canal (NEMDC) North: Reaches F–G
- NEMDC South: Reach H
- American River north levee: Reach I

The Phase 4b Landside Improvements Project is intended to address underseepage, stability, erosion, penetrations, and levee encroachments along approximately:

- 3.4 miles of the Sacramento River east levee (Reach A),
- 3.3 miles of the PGCC west levee (Reach E)
- 6.8 miles of the NEMDC west levee (Reaches F–G), and
- 1.8 miles of the American River north levee (Reach I),
- the gaps remaining between the improvements of previous phases at levee penetrations and road crossings on the NCC south levee,
- remaining Project features discussed in previous NEPA/CEQA documents that were not completed by SAFCA,
- and provides overlapping environmental assessment and analysis of the NEMDC west levee (Reach H) for levee raising, erosion repair, and pumping plant modifications.

The Phase 4b Landside Improvements Project includes relocation of the existing irrigation and drainage canals landside of the levee slopes, and relocation and modification of existing pumping plants, bridges, encroachments, and any penetrations of the levee embankment. The project also proposes removal of vegetation within the levee right of way to address USACE requirements and environmental mitigation. Levee height deficiencies will be addressed along the northern segment of the NEMDC west levee and along the PGCC west levee (USACE and SAFCA 2010).

Construction of the Phase 4b Landside Improvements Project was originally anticipated to begin as early as 2012 and be completed in 2013. However, the construction schedule was revised because of delayed Federal authorization and changes resulting from project design and engineering.

Reach H is located along the west side of the NEMDC from the intersection of Northgate Boulevard and the Arden-Garden Connector on the south to the NEMDC Stormwater Pumping Station on the north (Figure 3-1). Construction along Reach H would include the installation of a seepage cutoff wall through the majority of the reach. A landside stability berm would be constructed at the San Juan Road bridge crossing and a landside seepage berm would be constructed adjacent to the Interstate 80 (I-80) crossing.

A landside levee patrol road would be constructed along the entire length of Reach H. Two erosion sites at the confluences of Dry Creek and Arcade Creek with the NEMDC would be repaired with soil-filled rock riprap. Discharge pipes at the storm drainage pump stations, City of Sacramento Pump Station No. 102 and the Reclamation District (RD) No. 1000 Pumping Plant No. 8 would be reconstructed. An 8-inch City of Sacramento water main would also be removed and replaced to meet USACE and CVFPB requirements. Relief wells would be constructed where a Pacific Gas & Electric (PG&E) gas main crosses the levee at Haggin Avenue. Water from these relief wells would be discharged to the City of Sacramento stormwater drainage system.

Plates 1 through 8, presented in Appendix A, present a detailed overview of Reach H Construction Project features.

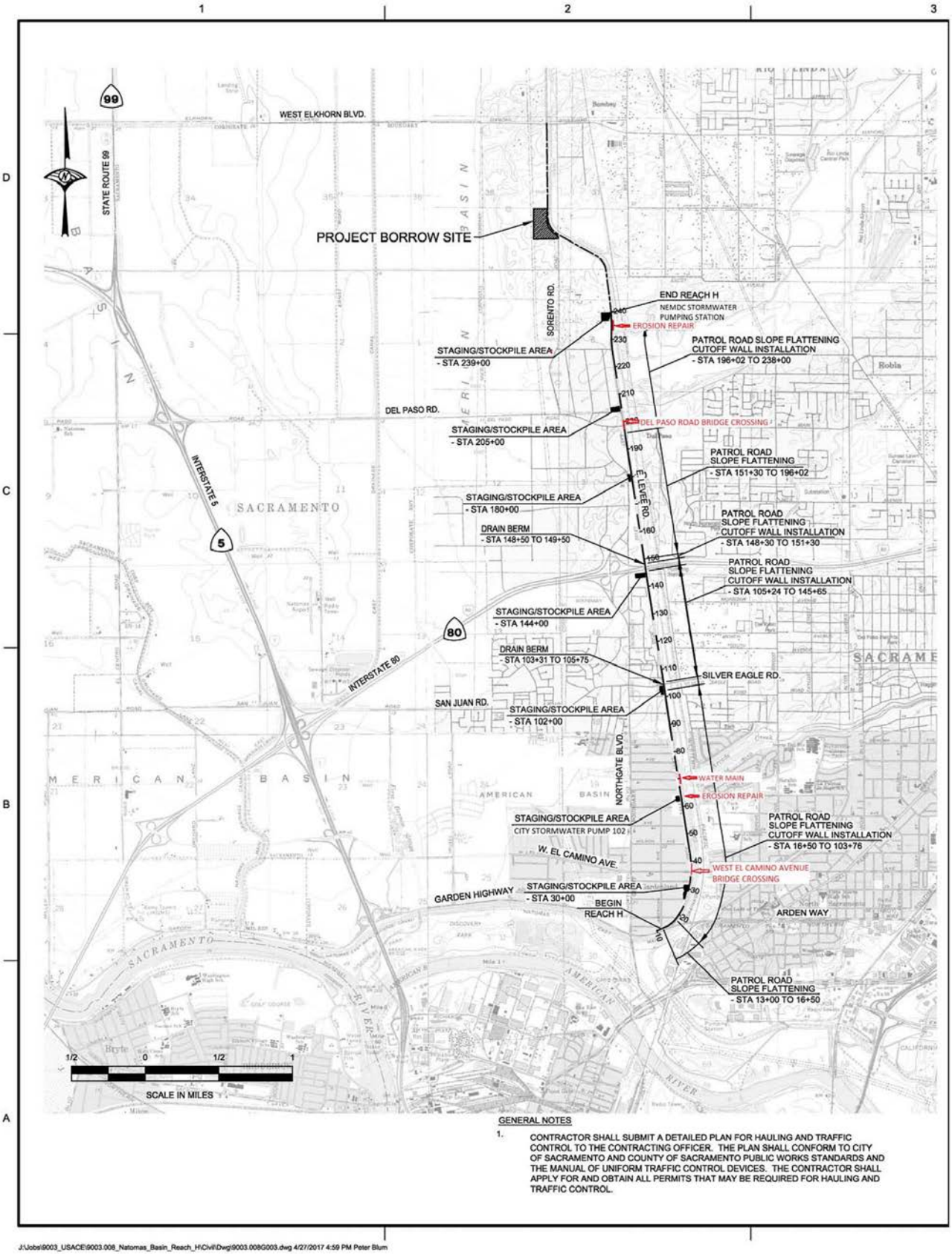

Figure 3-1. Reach H Construction Project Area

4 CHANGES TO THE REACH H CONSTRUCTION PROJECT

The following discussion describes the proposed changes to the Reach H Construction Project that resulted from recent project design and engineering activities. The proposed changes, clarifications or additions to the Reach H Construction Project since the 2010 Final EIS/EIR that are analyzed in this addendum are changes to:

- construction schedule;
- traffic control measures;
- mitigation for impacts on recreational access;
- mitigation area for tree loss/removal;
- removal of features that have encroached into the RD 1000 levee easement which may impede Reach H project construction;
- design features (i.e., cutoff walls, stability berm/seepage berm, relief wells, the City of Sacramento water main, and the landside patrol road); and
- identification of staging areas, borrow sites, and disposal sites.

4.1 CONSTRUCTION SCHEDULE

The 2010 EIS/EIR stated that construction of both the cutoff wall and landside improvements along Reach H would begin in 2012 and be completed in 2013. The 2017 MFR anticipated that construction would begin on March 1, 2018, with completion expected by November 30, 2019. Preconstruction work occurred along Reach H between November 2017 and February 2018 and involved removing trees along the levee improvement alignments.

Construction at the West El Camino Avenue and Del Paso Road/Main Avenue bridge crossings is now proposed to begin in spring 2019. Mobilization for construction along the remainder of Reach H is anticipated to begin April 1, 2019, with the levee degrade and cutoff wall work beginning April 15, 2019 and concluding by December 31, 2020. Reconstruction of the levee embankment, construction of all encroachments and the landside patrol road, and paving of the levee crown bike trail would occur after the cutoff wall is installed.

All in-water construction at the Arcade Creek and Dry Creek erosion sites would occur between June 15 and September 30 in either 2019 or 2020. Erosion control seeding, site cleanup, and demobilization would be completed by the end of November in either construction year. Willow pole planting and other restoration activities would be completed by the end of November 2020.

4.2 TRAFFIC CONTROL MEASURES

The 2010 Final EIS/EIR addressed the temporary roadway closures of West El Camino Avenue and Del Paso Road/Main Avenue required during construction along Reach H. Traffic control measures were considered and adopted to mitigate the identified significant impact of these roadway closures. The duration of the 24/7 closures would be minimized and the roadways would be reopened between the different stages of project construction. It was anticipated that each roadway closure would last no more than 28 days, assuming the contractor works 7 days a week.

Since completion of the 2010 Final EIS/EIR, the traffic control measures that were previously considered are proposed to be refined and changed as characterized according to the stages defined in the following discussion.

Traffic near the Reach H Construction Project includes vehicular traffic on roadways such as Del Paso Road, West El Camino Avenue, Northgate Boulevard, and American Avenue, and bicycle and pedestrian traffic on the recreational trail on the NEMDC west levee. Traffic controls would be established during the initial construction phases, such as during the removal of trees adjacent to East Levee Road or during field verification of utility locations. After equipment mobilization, installation of a slag cement cement bentonite (SCCB) seepage cutoff wall would begin along portions of the levee at the West El Camino Avenue and Del Paso Road/Main Avenue bridge crossings. During construction along Reach H, traffic control would be handled in four stages:

- **Stage 1** would involve fully closing the West El Camino Avenue and Del Paso Road/Main Avenue bridges over the NEMDC. SCCB seepage cutoff walls would be constructed to enable reopening of the bridges as soon as practicable, while allowing utilities to remain in place. The West El Camino Avenue and Del Paso Road/Main Avenue bridges would be closed for approximately 2 months.

  Trench plates would be placed over the seepage cutoff walls while the SCCB mixture cures, allowing traffic controls to be temporarily lifted during construction. The roadways would remain closed to through traffic, with only local traffic access allowed along the following routes: from the West El Camino Avenue bridge, west to American Avenue and east to the intersection with Colfax Street; and from the Del Paso Road/Main Avenue bridge, west to Northgate Boulevard and east to Pell Drive.

  The detour routes during the closure of West El Camino Avenue would include Northgate Boulevard, the Arden-Garden Connector, and San Juan Road/Silver Eagle Road. The detour route during the closure of Del Paso Road/Main Avenue would include Northgate Boulevard and Norwood Avenue. Pedestrian and bike traffic access would be limited to Silver Eagle Road as the detour, while vehicular traffic would be able to use either I-80 or Silver Eagle Road. Closure of these bridges would be coordinated with the Reach I Garden Highway closures to avoid closure of any bridges concurrent with planned Garden Highway closures.

- **Stage 2** would involve constructing a seepage berm along the NEMDC at the I-80 bridge crossing and a stability berm at the San Juan Road bridge crossing. At these locations, clearance between the bridge and the ground at the waterside toe is insufficient for construction of an SCCB cutoff wall. Work would occur on East Levee Road and would not require closing the bridge crossing at either I-80 or San Juan Road.

- **Stage 3** would involve constructing the soil-bentonite (SB) seepage cutoff wall along the remaining length of Reach H. Road closures would not be necessary because the work would occur along the recreational trail on the NEMDC west levee between the Arden-Garden Connector and Del Paso Road. Recreationists would be detoured onto Northgate Boulevard.

- **Stage 4** would involve constructing the SB seepage cutoff wall along East Levee Road between Sotnip Road and the NEMDC Stormwater Pumping Station. East Levee Road would be fully closed in this area, and local traffic would be detoured to Sorento Road.

SAFCA would coordinate with the City of Sacramento Department of Transportation, the Sacramento Regional Transit District, and other interested parties before roadway closures. Road closure notifications would be released to the public and road signs indicating the closures and detours would be installed at least 2 weeks before the closures.

4.3 RECREATION ACCESS DURING CONSTRUCTION

The 2010 Final EIS/EIR addressed impacts on recreationists and existing recreational opportunities, including the temporary closure of the recreational trail on the NEMDC west levee from the Arden-Garden Connector to

Elkhorn Boulevard and other impacts on Gardenland Park. Mitigation measures identified in the 2010 Final EIS/EIR were considered and adopted to mitigate the significant impact of the temporary, short-term loss of parkland, amenities, and function by creating detours and alternate recreational paths. Since completion of the 2010 Final EIS/EIR, proposed measures to reduce impacts on recreational access that were previously considered are proposed to be refined and changed as described in the following text.

Bicyclists and pedestrians using the existing recreational trail would be detoured to Northgate Boulevard. Northgate Boulevard parallels Reach H from the Arden-Garden Connector north to the intersection with Del Paso Road. The detour would continue north on Sorento Road, where recreationists would be able to access East Levee Road. The Twin Rivers Unified School District borrow site is located at the intersection of Sorento Road and East Levee Road. Haul route traffic at this location may be heavy at times and the detour may require traffic controls.

As defined in the 2010 Final EIS/EIR, USACE/SAFCA would prepare a bicycle detour plan for the recreational trail in consultation with the City of Sacramento Bicycle and Pedestrian Coordinator before the start of construction. Signage would be posted at entrances to the bike path to provide information about reduced or closed access and to direct recreationists to alternate access points and detours. The plan would identify haul truck trip thresholds beyond which traffic controls would need to be installed and operated.

Gardenland Park is a neighborhood park located adjacent to the NEMDC west levee. The park may be adversely affected by temporary construction-generated noise, dust, and visual disturbance. A portion of Gardenland Park would be used as a staging area from April through November of either 2019 or 2020. The park would also be affected by work on the City of Sacramento Sump Pump 102. Hansen Ranch Park, located east of the NEMDC, may experience temporary, short-term construction-generated noise and dust impacts because of its proximity to the Dry Creek erosion repair on the waterside of the NEMDC west levee. USACE/SAFCA would continue to coordinate with the City of Sacramento Recreation and Parks Department and ensure that adequate information, signage, and notification of potential closures of public recreational facilities is provided in timely manner.

4.4 MITIGATION AREAS FOR TREE LOSS/REMOVAL

Approximately 120 trees in or near the projected impact area of the cutoff wall, landside slope, and maintenance road were removed between November 2017 and February 2018. The trees were primarily valley oak (*Quercus lobata*), ornamentals, and nonnatives, including blue gum and red ironbark (*Eucalyptus* sp.). Removal of trees was disclosed and analyzed in the 2010 Final EIS/EIR. Current estimates for tree removal are not substantially different from the original estimates listed in the 2010 Final EIS/EIR. In the 2010 Final EIS/EIR, SAFCA committed to providing mitigation for the tree removal, but no mitigation site was identified at that time. USACE/SAFCA have since determined that tree mitigation would occur at SAFCA's Novak site. The Novak site occupies approximately 11 acres near the intersection of Garden Highway and Powerline Road in Sacramento County (Appendix A Plate 8). Tree mitigation involves installing and maintaining plants until they have reached self-sufficiency. Plantings would be surveyed for survival annually for 5 years until survival criteria are met. Replacement plantings would be added as needed for 2 years. Tree mitigation would be implemented in a manner consistent with prior NLIP/NBP phases.

4.5 SPECIFIC DESIGN FEATURES

4.5.1 CUTOFF WALLS

SCCB is a newly evaluated method of constructing cutoff walls that reduces certain impacts when compared to standard methods of construction. Constructing the SB cutoff walls analyzed in the 2010 Final EIS/EIR would require degrading the levee height by at least one-third to allow adequate space and to minimize hydraulic fracture of the levee during construction. By using SCCB, the levee height could be reduced by a smaller amount for construction of the cutoff wall at the West El Camino Avenue and Del Paso Road bridge

crossings. A SCCB cutoff wall also cures more rapidly than the SB cutoff wall. These differences would allow public roads to be reopened sooner and existing utilities and infrastructure to remain in place. It would also reduce the amount of material that would need to be hauled offsite, thereby reducing noise and air quality impacts.

The design of the Reach H Construction Project calls for installation of a SB cutoff wall through approximately 70% of the Reach H levee. An SCCB cutoff wall would be constructed in locations where existing roadway conditions prevent the levee modifications that would be required for construction of the SB cutoff walls. Such locations include the West El Camino Avenue and Del Paso Road bridge crossings.

4.5.2 STABILITY BERM/SEEPAGE BERM

Because low overhead clearance near the waterside levee prevents construction of a SCCB cutoff wall at the I-80 crossing, a landside seepage berm is proposed for installation adjacent to the I-80 overpass. This berm would consist of a 24-inch-thick drainage layer, berm fill placed over a drainage subsurface layer, and drain rock placed at the berm toe. The seepage berm would be approximately 85 feet long and up to 50 feet wide. Minimum height at the levee toe would be 4 to 7 feet.

A landside stability berm would be constructed between the San Juan Road bridge and the existing ground. The berm would consist of a 24-inch-thick drainage layer, concrete lining on the slope, and permeable concrete placed at the berm toe. The stability berm would be approximately 240 feet long with a minimum height of 10 feet, minimum top width of 5 feet, and minimum bottom width of 10 feet.

4.5.3 CITY OF SACRAMENTO WATER MAIN

An existing City of Sacramento 8-inch water main is located about one-third mile north of the confluence of Arcade Creek and the NEMDC (Figure 3-1). At this location, the water main interferes with the levee height degrade and construction of the cutoff wall. Because of this interference, the water main would need to be removed and replaced. Additional modifications required include placement of a closure valve and construction of a valve vault at the levee crown to provide a positive closure device that would meet current design requirements. The water main would be reinstalled to meet current USACE and CVFPB levee design requirements.

4.5.4 LANDSIDE PATROL ROAD

A patrol road with a minimum width of 12 feet would be constructed at the landside levee toe for the entire length of Reach H. The patrol road would have ramps to the levee crown at the roadway crossings, including West El Camino Avenue, I-80, and Del Paso Road.

4.5.5 SEEPAGE RELIEF WELLS

A PG&E gas main crosses the NEMDC west levee at Haggin Avenue. The SB cutoff wall would be discontinuous at this location and two relief wells would be constructed to meet seepage design criteria. Water from these relief wells would be discharged to the City of Sacramento stormwater drainage system. The relief wells would only operate and discharge water when surface water elevations in the NEMDC are above the ground surface at the landside toe of the levee causing surface water to be present. Plates 9 through 12 in Appendix A present current design drawings of the proposed relief wells.

4.5.6 RESIDENTIAL STRUCTURE DEMOLITION

During right of way boundary surveys, the residential structure at 200 Cleveland Avenue (Sacramento County Assessor's Parcel Number (APN) 274-0142-017) was found to be encroaching on the existing RD

1000 levee easement on land that is owned by the County of Sacramento. To resolve this encroachment, SAFCA would purchase the parcel and structure. The structure and other on-site improvements will be demolished and/or removed from the parcel to accommodate the construction of the adjacent levee improvements.

4.5.7 RIGHT OF WAY FENCE RELOCATION

During right of way boundary surveys following certification of the 2010 Final EIS/EIR, it was determined that the eastern fenceline on several parcels along the levee from Cleveland Avenue to Peralta Avenue had encroached into the existing RD 1000 levee easement/land ownership area. To resolve these encroachments, SAFCA would relocate the property fenceline and remove on-site improvements or objects located within the area of the encroachment to accommodate the construction of the adjacent levee improvements.

The parcels subject to fence relocation include: APN 274-0141-017, 274-0141-019, 262-0262-014, 262-0262-015, 262-0261-019, and 262-0261-018. Plates 13 and 14 in Appendix A identify those parcels and lands within Reach H construction area where SAFCA would relocate existing residential property fences to correctly locate them on their respective legal parcel boundaries.

4.6 STAGING AREAS, BORROW SITES, AND DISPOSAL SITES

4.6.1 STAGING AREAS

Seven staging areas along the length of Reach H are being proposed (Figure 3-1). Staging areas would be located on the landside of the levee at intervals of 2,000–4,000 feet to minimize the distance required to pump the water-bentonite slurry mixture to the open cutoff wall trench. The staging areas would be accessed via Harding Avenue, Bowman Avenue, Rimmer Avenue, Rosin Court, Northgate Boulevard, Sotnip Road, and East Levee Road.

The 2010 EIS/EIR did not describe the specific locations of staging areas that would be required for construction of the Reach H improvements. Small staging areas could be used for trailers, batch plant (mixing equipment), and vehicle parking. If needed, waterside bench areas may be used for stockpiling of levee degrade soil, provided that the areas fully contain all materials. No materials that could be washed into the NEMDC would be left on the levee's waterside toe.

Cutoff wall construction would occur in a linear fashion, and would require multiple staging areas close to construction crews for the batch plants to supply the slurry mixture. If necessary, the levee crown could be used as an additional staging area in some locations; however, locating the batch plant on-site would require temporary levee degrades and setup of special barriers to provide secondary containment for the batch plant at these sites.

4.6.2 BORROW SITES

The use of the Krumenacher and Twin Rivers Unified School District borrow sites was fully analyzed in the 2010 Final EIS/EIR. Currently, only the Twin Rivers Unified School District site is being proposed as the borrow source for Reach H. This site is located northwest of the intersection of Sorento Road and East Levee Road, less than three-quarters of a mile north of the north end of Reach H (Figure 3-1).

The 2010 Final EIS/EIR identified the combined borrow material requirements for both Reach H and Reach E because they were scheduled for simultaneous construction. The total quantity of borrow proposed for the construction of Reaches E and H in the 2010 Final EIS/EIR was 109,000 cubic yards (cy); the maximum borrow for Reach H is currently estimated at about 55,000 cy.

Reusing material excavated from the Reach H cutoff wall as material for the stability/seepage berms would reduce the number of truck trips required to dispose of excavated material, and would reduce the amount of borrow

material required for the construction along Reach H. The amount of material that could be reused is unknown at this time.

4.6.3 DISPOSAL SITES

No specific disposal sites for Reach H were specifically identified for use in the 2010 Final EIS/EIR. However, several existing disposal sites were identified so that the contractor could choose where to dispose of spoil material from cutoff wall excavations. The two nearest sites are the Kiefer Landfill in Sacramento County and the Western Regional Landfill in Placer County.

Constructing the stability/seepage berms using levee degrade material and/or material excavated during cutoff wall construction would reduce the quantity of materials requiring disposal. Materials that would be placed as fill would be dried and worked until the materials are consistent with USACE material placement standards. To dry and work the material, an area large enough to accommodate daily production of excavated materials, approximately 1,000 cy per day, would be required. Materials would be dried and worked in landside staging areas, so that materials could not fall or wash into surface waters.

5 STANDARD FOR ADOPTION OF A CEQA ADDENDUM

If, after adoption of an EIR, altered conditions or changes or additions to a project are proposed, the State CEQA Guidelines provide three ways to address these changes: a Subsequent EIR (Section 15162), a Supplemental EIR (Section 15163), or an Addendum (Section 15164).

State CEQA Guidelines Sections 15162–15164 set forth the criteria for determining the appropriate additional environmental documentation, if any, to be completed when there is a previously certified EIR covering the project for which a subsequent discretionary action is required. The State CEQA Guidelines provide three ways to address these changes: a subsequent EIR (Section 15162), a supplemental EIR (Section 15163), or an addendum (Section 15164).

Sections 15162(a) and 15163 of the State CEQA Guidelines state that when an EIR has been certified for a project, no subsequent or supplement to an EIR shall be prepared for that project unless the lead agency determines, based on substantial evidence in light of the whole public record, one or more of the following:

(1) substantial changes are proposed in the project that will require major revisions of the previous EIR due to the involvement of new significant environmental effects or a substantial increase in the severity of previously identified effects;

(2) substantial changes occur with respect to the circumstances under which the project is undertaken that will require major revisions of the previous EIR due to the involvement of new significant environmental effects or a substantial increase in the severity of previously identified significant effects; or

(3) new information of substantial importance, which was not known and could not have been known with the exercise of reasonable diligence at the time the previous EIR was certified as complete, shows any of the following:

   (A) The project will have one or more significant effects not discussed in the previous EIR.

   (B) Significant effects previously examined will be substantially more severe than shown in the previous EIR.

   (C) Mitigation measures or alternatives previously found not to be feasible would in fact be feasible, and would substantially reduce one or more significant effects of the project, but the project proponents decline to adopt the mitigation measures or alternatives.

   (D) Mitigation measures or alternatives that are considerably different from those analyzed in the previous EIR would substantially reduce one or more significant effects on the environment, but the project proponents decline to adopt the mitigation measure or alternative.

State CEQA Guidelines Section 15163 states that a lead agency may choose to prepare a supplement to the EIR rather than a subsequent EIR if changes proposed would meet the conditions described in Section 15162 and only minor additions and changes would be necessary to make the previous EIR adequate.

State CEQA Guidelines Section 15164 states that a lead agency may prepare an addendum to a certified EIR if some changes or additions are necessary, but none of the conditions described above in Sections 15162 or 15163 calling for the preparation of a subsequent or supplemental EIR have occurred.

As explained in the analysis in Section 6, below, SAFCA has determined that the proposed modifications and refinements to the Reach H Construction Project would not:

- result in any new significant or potentially significant environmental effects, or

- result in a substantial increase in the intensity or severity of previously identified significant or potentially significant effects.

In addition, no new information of substantial importance has arisen that shows that:

- the project would have new significant or potentially significant effects,
- the project would have substantially more intense or severe effects,
- mitigation measures previously found to be infeasible would in fact be feasible, or
- mitigation measures that are considerably different from those analyzed in the 2010 Final EIS/EIR would substantially reduce one or more significant or potentially significant effects on the physical environment.

Because none of the conditions described in Section 15162 of the State CEQA Guidelines calling for preparation of a Subsequent EIR have occurred, an Addendum to the EIR, consistent with Section 15164 of the State CEQA Guidelines, is the appropriate CEQA document to evaluate the proposed modifications and refinements to the project and substantiate that none of the conditions described in Section 15162 have occurred.

6 ENVIRONMENTAL ANALYSIS

This section of the addendum analyzes the potential effects on the physical environment from implementing the proposed changes to the Reach H Construction Project. This analysis has been prepared to determine whether any of the conditions in Section 15162 or 15163 of the State CEQA Guidelines (as described in Section 5) would occur as a result of the proposed changes to the Reach H Construction Project.

5.1 ISSUES NOT ANALYZED FURTHER IN THIS ADDENDUM

The proposed changes to the Reach H Construction Project would not result in new significant impacts or a substantial increase in the intensity or severity of the impacts analyzed and disclosed in the 2010 Final EIS/EIR for the following topic areas, because the proposed changes would result in negligible additional impacts that would not would not increase the project footprint, the duration of construction, or require other changes to construction with the potential to cause new environmental effects or substantially increase the severity of impacts as compared to the impacts disclosed in the 2010 Final EIS/EIR:

- Agricultural Resources
- Geology, Soils, and Mineral Resources
- Water Quality
- Noise
- Greenhouse Gas Emissions
- Visual Resources (Aesthetic Resources)
- Utilities and Service Systems
- Hazards and Hazardous Materials
- Environmental Justice

5.2 ISSUES CARRIED FORWARD FOR FURTHER ANALYSIS IN THIS ADDENDUM

The proposed changes to the Reach H Construction Project as described in Section 4 of this addendum may affect the topic areas listed below. Therefore, the analyses in this section consider the following topics in further detail:

- Biological Resources
- Cultural Resources
- Recreation
- Transportation and Circulation
- Air Quality
- Hydrology and Hydraulics
- Land Use, Socioeconomics, and Population and Housing

5.2.1 AQUATIC AND TERRESTRIAL BIOLOGICAL RESOURCES

Appendix B-1 to this Addendum shows an existing species list issued to USACE by the U.S. Fish and Wildlife Service (USFWS) as part of Section 7 consultation for the revised NLIP/NBP Phase 4b project. The correspondence included search results from the California Department of Fish and Wildlife's (CDFW's) California Natural Diversity Database (CNDDB) for Yolo and Sacramento counties, but those results have since expired (USFWS 2017). Therefore, Appendix B-2 to this Addendum includes updated results from the CNDDB that were obtained using the same search criteria. The results of the updated CNDDB search indicate that no new species have been added and no changes in status have occurred in the vicinity of the Reach H Construction Project since the official species list was issued (USFWS 2017; CDFW 2018).

Changes to Reach H construction within the existing levee footprint, including the cutoff wall, seepage/stability berms, relief wells, and landside levee patrol road, and in other existing developed and disturbed areas (i.e., traffic control, recreational access, and disposal haul routes) were fully evaluated in the 2010 Final EIS/EIR for the Phase 4b NLIP/NBP. The proposed changes would not alter potential impacts on sensitive species. For the remaining changes or additions to the Reach H Construction Project, the following discussion concludes that because USACE/SAFCA would conform with existing mitigation measures and permit conditions, and would continue to consult with the regulatory agencies, the project would not result in new or substantially more severe impacts than those identified in the 2010 Final EIS/EIR for the Phase 4b NLIP/NBP.

5.2.1.1 FISHERIES AND SENSITIVE AQUATIC HABITAT

As reported in the 2010 Final EIS/EIR, in-water work for erosion site repairs at Dry and Arcade creeks could result in direct impacts on the Central Valley steelhead (*Oncorhynchus mykiss irideus*) distinct population segment which is Federally listed as threatened. Steelhead are known to be present in the NEMDC (also known as Steelhead Creek) in the fall and winter during their migration to spawning grounds. Implementing recommended conservation measures to limit in-water work to between July 1 and September 30 is expected to avoid adverse impacts on Central Valley steelhead and essential fish habitat for listed species.

Waterside staging areas and in-water work for erosion site repairs may result in temporary and permanent impacts on aquatic habitat. As discussed in the 2010 Final EIS/EIR, the potential exists for giant garter snake (*Thamnophis gigas*), which is both Federally listed and State-listed as threatened, and western pond turtle (*Emys marmorata*), a CDFW species of special concern, to be present along the NEMDC. Table 4.7-1 of the 2010 Final EIS/EIR quantifies the temporary and permanent impact areas of giant garter snake habitat, and identifies habitat acreages that would be preserved and/or created to compensate for temporary construction-related and permanent impacts in the project footprint. To minimize disturbance to western pond turtle, previously adopted Mitigation Measure 4.7-h in the 2010 Final EIS/EIR requires surveys and relocation procedures to be conducted immediately after dewatering and before fill of suitable aquatic habitat.

Changes to the Reach H Construction Project would result in impacts on aquatic habitats and species similar to and consistent with those identified in the 2010 Final EIS/EIR. Implementing previously adopted Mitigation Measures 4.7-a, 4.7-c, 4.7-d, 4.7-e, 4.7-h, and 4.7-j would reduce the potentially significant impacts on fisheries, sensitive aquatic species, and aquatic habitats to a less than significant level. No additional mitigation measures are required.

5.2.1.2 SPECIAL-STATUS TERRESTRIAL SPECIES AND UPLAND HABITATS

Changes or additions to the Reach H Construction Project that may affect special-status terrestrial species include development of the seven landside staging areas; use of the borrow site at Twin Rivers Unified School District; and removal of trees located within the cutoff wall construction area, landside levee slope, and levee maintenance road locations.

The landside staging areas and borrow site are located primarily in annual grassland/ruderal areas of residential and commercial properties that may provide suitable habitat for ground-nesting birds; foraging habitat for Swainson's hawk (*Buteo swainsonii*), which is State-listed as threatened; and nesting and wintering habitat for burrowing owl (*Athene cunicularа*), a CDFW species of special concern. As indicated in the 2010 Final EIS/EIR, burrowing owls are known to occur along portions of NEMDC South. The potential exists for direct loss of burrowing owls if they are present within the affected habitats. Furthermore, upland grassland habitat within approximately 200 feet of suitable aquatic habitat may provide wintering sites for giant garter snake (USFWS 2016).

Grading and earth moving activities at the staging areas and borrow site would result in temporary impacts on grassland habitat, because these areas would be used only during construction activities and would be reclaimed

and reseeded once construction is complete (USACE and SAFCA 2010). To minimize disturbance to burrowing owl, previously adopted Mitigation Measure 4.7-h in the 2010 Final EIS/EIR requires preconstruction surveys, establishment of minimum disturbance buffers, and relocation procedures to be conducted in coordination with the California Department of Fish and Game (now known as CDFW).

Permanent impacts from Reach H Construction Project activities on special-status terrestrial species consist of removal of landside woodlands and trees that provide waterside shaded riverine aquatic (SRA) habitat. As part of approved preconstruction activities, USACE/SAFCA has already removed trees located within the cutoff wall construction area, landside levee slope, and levee maintenance road locations (USACE 2018). The removal of tree canopy acreage along the NEMDC was fully disclosed in Section 4.7 of the 2010 Final EIS/EIR, and Table 4.7-2 quantified and evaluated compensatory mitigation for the affected canopy acreage for both landside woodland and waterside SRA habitat.

Temporary and permanent impacts on grassland and woodland habitat along the NEMDC were evaluated in Section 4.7.1.1 of the 2010 Final EIS/EIR. Table 4.7-1 shows temporary and permanent losses of annual grassland/ruderal acreage, including associated temporary and permanent impacts on Swainson's hawk foraging and giant garter snake upland habitats. Tables 4.7-6 and 4.7-7 of the 2010 Final EIS/EIR identify permanent impacts on Swainson's hawk habitat, including losses of both grassland and woodland habitat. The proposed changes associated with the Reach H Construction Project would not increase the affected acreages shown in these tables. Impacts to annual grassland/ruderal acreage, including associated temporary and permanent impacts on Swainson's hawk foraging and giant garter snake upland habitat, and Swainson's hawk habitat would not be more severe than the levels identified in the 2010 Final EIS/EIR.

Compensation for impacts on landside woodland and trees that provide SRA habitat includes transplanting suitable trees from the Phase 4b Project area and planting a variety of native tree species to create woodland habitat as part of the programmatic compensation strategy for the NLIP/NBP Landside Improvements Project (USACE and SAFCA 2010).

As discussed in Section 4.4, "Mitigation Areas for Tree Loss/Removal," of this addendum, the changes to the Reach H Construction Project's design include identifying the SAFCA-owned Novak site as the location for compensatory tree mitigation. The Novak site is part of the Fisherman's Lake Borrow Area complex, which was previously identified in the NLIP/NBP Phase 3 Final EIS/EIR (USACE and SAFCA 2009a) and the NLIP/NBP Phase 4a Final EIS/EIR (USACE and SAFCA 2009b) for woodland tree mitigation and other habitat creation.

The Novak site contains an existing 11-acre woodland transplant area and riparian woodland corridor described in the *NLIP Phase 4a Landside Improvements Project Final Mitigation and Monitoring Plan* set aside for mitigation of Phase 4 tree removal (SAFCA 2010). Adding trees to this area as compensation for impacts of the Reach H Construction Project represents substantial compliance with the existing NLIP/NBP Mitigation and Monitoring Plan and fully mitigates for tree removal associated with Reach H. Therefore, the proposed changes do not constitute a new or substantially more severe impact on biological resources than previously analyzed (SAFCA 2010).

Potentially significant impacts of project refinements related to temporary and permanent removal of upland vegetation are consistent with those identified in the 2010 Final EIS/EIR. As concluded in that previous document, implementing Mitigation Measure(s) 4.7-a, 4.7-d, 4.7-e, 4.7-f, 4.7-h, and 4.13-b would reduce the potentially significant impacts of the project on sensitive upland habitats, protected trees, and terrestrial species to a less-than-significant level. No additional mitigation measures are required.

5.2.2 CULTURAL AND PALEONTOLOGICAL RESOURCES

The potential impacts of implementing levee improvements were previously addressed in Section 4.8 of the 2010 Final EIS/EIR (USACE and SAFCA 2010). This project is subject to both Section 106 of the National Historic

Preservation Act, hereinafter referred to as "Section 106," and CEQA, each of which has specific cultural resources mitigation requirements.

In May 2008, USACE, SAFCA, and the State Historic Preservation Officer (SHPO) became signatories to a programmatic agreement (NLIP-PA) that includes the Natomas Levee Improvement Program and all elements composing Phase 4b of the NLIP/NBP. The NLIP-PA was subsequently amended in April 2015. The NLIP-PA governs SAFCA's implementation of the NLIP. In September 2015, the USACE and the SHPO became signatories to a Programmatic Agreement regarding the American River Common Features Project, Sacramento and Yolo Counties, California (ARCF-PA) that includes the Natomas Basin Project and all elements composing Phase 4b of the NLIP/NBP. The ARCF-PA governs USACE's implementation of the NBP. Completion of the stipulations required by the ARCF-PA assures compliance with Section 106.

After the 2010 Final EIS/EIR was completed, additional cultural resources investigations were conducted before geotechnical studies within Reach H were conducted. These studies consisted of a records search, field investigations, and monitoring of core borings. The results were summarized in a memorandum entitled *Cultural Resources Inventory of the American River Common Features Reach H Geotechnical Investigation Area of Potential Effect (October 23, 2014) Cultural Resources Survey of Natomas Reaches D and H (April 2016)*. These studies did not result in the identification of additional cultural resources, but did note the presence of previously identified resources: a historic-era refuse deposit (CA-SAC-517/H) that was determined not eligible for inclusion in the National Register of Historic Places (NRHP) or the California Register of Historic Resources; and the NEMDC and the East Levee Road, which are NRHP contributing elements of RD 1000. Implementing Mitigation Measure 4.8-a would incorporate mitigation measures, if required, for any NRHP contributing elements of RD 1000.

In accordance with Stipulation IV[A] of the executed ARCF-PA, USACE is required to perform an inventory, evaluation, and finding of effect for identified resources within the area of potential effect for each project phase. Any newly identified resources would be subject to the stipulations in the ARCF-PA and to previously adopted Mitigation Measures 4.8-b, 4.8-c, and 4.8-d (USACE and SAFCA 2010). The potential exists for discovery of or damage to unknown cultural resources and potentially significant and unavoidable impacts on those resources; however, this finding is consistent with the significance conclusions described in the 2010 Final EIR/EIS (USACE and SAFCA 2010). No additional mitigation measures are required.

The proposed acquisition and demolition of the existing residence located on APN 274-0142-017 would not result in an adverse impact to cultural or historic resources. The building was reconstructed in 1990 and does not meet the minimum age requirement for CEQA (45 years) for evaluation for the California Register of Historical Resources, or for Section 106 of the National Historic Preservation Act (50 years). Nor does it appear that the building would meet the criterion of exceptional importance to merit study as a potential historical resource or historic property. No mitigation for demolition of this residence is required.

5.2.3 RECREATION RESOURCES

Since completion of the 2010 Final EIS/EIR, recreational resources potentially affected by the Reach H Construction Project have been identified more precisely, and measures to reduce impacts on recreational access have since been refined and changed. The Reach H Construction Project would result in temporary impacts on recreational opportunities and recreational experiences along the recreational trail on the NEMDC west levee, which extends from the Arden-Garden Connector to Elkhorn Boulevard; at Gardenland Park, located off Bowman Avenue immediately adjacent to the NEMDC and the recreational trail; and at Hansen Ranch Park, located east of the NEMDC.

Potential impacts on City of Sacramento parks, including Gardenland Park and Hansen Ranch Park, and on recreational trails and bicycle facilities were analyzed in the 2010 Final EIS/EIR. Impact 4.13-c, "Temporary Changes in Recreational Opportunities during Project Construction Activities," concluded that access to these

facilities may be temporarily restricted during construction, and that the quality of recreational opportunities could potentially be reduced as a result of increased noise, dust, and visual disturbance from construction activities. USACE and SAFCA adopted Mitigation Measure 4.13-c(1), "Prepare and Implement a Bicycle Detour Plan for All Bicycle Trails and On-Street Bicycle Routes, Provide Detours for Bicycle Facilities, and Coordinate with City and/or County Departments of Parks and Recreation to Repair of Damage to Recreational Facilities." and Mitigation Measure 4.13-c(2), "Provide Construction Period Information on Recreational Facility Closures and Detours and Provide Detours for Alternate Routes to Marinas," which would reduce this impact to a less-than-significant level.

Construction of the SB and SCCB seepage cutoff walls would encroach on the recreational trail and require temporary closure to public use. In addition, haul truck traffic at the Twin Rivers Unified School District borrow site, located at the intersection of Sorento Road and East Levee Road, may be heavy at times and the proposed recreational detour may require traffic controls.

USACE/SAFCA propose detouring bicyclists and pedestrians onto Northgate Boulevard. Northgate Boulevard parallels Reach H from near the Arden-Garden Connector north to the intersection with Del Paso Road. The detour would continue north on Sorento Road, where bicyclists and pedestrians would be able to access East Levee Road.

Before the start of construction, the contractor would prepare and submit the detour plan for the recreational trail to the City of Sacramento Bicycle and Pedestrian Coordinator for approval. Signage would be posted at entrances to the recreational trail to provide information regarding reduced or closed access and to direct bicyclists and pedestrians to access points and detours. Preparation of a detour plan and posting of signage would be consistent with previously adopted Mitigation Measure 4.13-c(1).

Construction of the Reach H Project would use a portion of Gardenland Park as a staging area from April through November of either 2019 or 2020. Gardenland Park would also be affected during improvements to City of Sacramento Sump Pump 102. In addition, Hansen Ranch Park may be temporarily affected because of its proximity to the Dry Creek erosion repair on the waterside of the NEMDC west levee.

Consistent with previously adopted Mitigation Measure 4.13-c(2) in the 2010 Final EIS/EIR, USACE/SAFCA would coordinate with the City of Sacramento Recreation and Parks Department to make information available to the public regarding closure of public recreational facilities, detours, and alternate sites available.

For the reasons discussed above, temporary changes in recreational opportunities and recreational experiences caused by detouring users from the existing recreational trail to surface streets from the Arden-Garden Connector north to the intersection with Del Paso Road and onto Sorento Road would not substantially increase the severity or intensity of the recreation impacts identified in the 2010 Final EIS/EIR. USACE/SAFCA would implement previously adopted Mitigation Measure 4.13-c(1), and Mitigation Measure 4.13-c(2), as identified in the 2010 Final EIS/EIR and MMRP. Implementing these mitigation measures would reduce potential temporary impacts on recreational opportunities during construction activities to less-than-significant. No additional mitigation is required.

5.2.4 TRANSPORTATION AND TRAFFIC

As estimated in the 2010 Final EIS/EIR, during peak construction activity periods, as many as 280 trucks per day would be required to move material from the borrow sites to the Reach H construction site; however, based on haul routes and other logistical limitations, it is now anticipated that fewer than 100 truck trips per day would be employed. Approximately 8,700 cy of aggregate base rock and approximately 1,500 cy of asphalt concrete (over the construction period) would be hauled from commercial sources that may be located up to 30 miles from the construction site. Commercial sources selected by the contractor would be approved by USACE and SAFCA.

The 2010 Final EIS/EIR based its analysis on the recommended screening criterion from the Institute of Transportation Engineers for assessing the effects of construction projects that create temporary traffic increases (ITE 1989). To account for the large percentage of heavy trucks associated with typical construction projects, the 2010 Final EIS/EIR used an impact threshold of 50 or more new trips in the peak direction during the peak hour. Conservatively assuming as many as 280 trucks per day, the proposed modifications would cause fewer than 50 new peak-direction trips during the peak hour on the roadways that connect to Reach H. No additional truck trips would occur beyond those analyzed in the 2010 Final EIS/EIR. Therefore, project impacts would be reduced.

5.2.5 AIR QUALITY

Section 4.11 of the 2010 Final EIS/EIR analyzed air quality impacts associated with the Phase 4b Project, including construction along Reach H. The 2010 Final EIS/EIR concluded that construction would result in maximum unmitigated daily emissions in excess of applicable thresholds established by the Sacramento Metropolitan Air Quality Management District (SMAQMD) for oxides of nitrogen (NO_X). In addition, because of the nonattainment status of the region with respect to ozone, particulate matter with an aerodynamic diameter of 10 micrometers or less (PM_{10}) and fine particulate matter with an aerodynamic diameter of 2.5 micrometers or less ($PM_{2.5}$), SMAQMD recommends that all construction projects implement the SMAQMD Basic Construction Emission Control Practices.

Because of the project's large size, the large construction area, and the intensity of construction activities to be conducted concurrently, and based on the region's existing nonattainment status and the modeling conducted, it was concluded that unmitigated construction-generated emissions could substantially contribute to a violation of air quality standards.

USACE/SAFCA developed a comprehensive fugitive dust control plan for Phase 4b Project in compliance with the SMAQMD guidelines to reduce PM_{10} emissions below the concentration-based threshold. The 2010 Final EIS/EIR found that, with implementation of the SMAQMD-recommended fugitive dust control plan, payment into off-site mitigation plans, and other measures detailed in Mitigation Measure 4.11-a of the 2010 Final EIS/EIR, the Reach H Construction Project would result in temporary and short-term construction-related emissions that would be less than significant for PM_{10}, and below the applicable mass emissions thresholds for NO_X. Therefore, the 2010 Final EIR/EIS determined that the project would not result in a direct, temporary, or short-term adverse effect on air quality.

Air pollutant emissions for the revised Reach H Construction Project were modeled in support of the 2017 and 2018 MFRs prepared by USACE, in which the proposed changes to the Reach H Construction Project were analyzed. The revised emissions estimates were modeled using the most recent Road Construction Emissions Model, Version 8.1.0. Although Version 9.0 was released in May 2018, it uses emissions factors from EMFAC2017, which has not yet been approved by the U.S. Environmental Protection Agency; therefore, the emissions estimates obtained using the Road Construction Emissions Model, Version 8.1.0 were used to support this analysis.

Table 6-1 summarizes emissions estimates for the Reach H Construction Project. (See Appendix C for detailed modeling inputs and calculations.) The emissions estimates in this table do not include reductions associated with implementation of mitigation recommendations.

Table 6-1. Total Maximum Daily Emissions for the Reach H Construction Project

	ROG	NO_X	PM_{10}	$PM_{2.5}$
Total Maximum Daily emissions (lb/day)	6.97	73.06	53.79	13.92
SMAQMD thresholds (lb/day)	N/A	85	N/A	N/A
Exceed Thresholds?	–	No	–	–

Notes:
lb/day = pounds per day; N/A = not applicable; NO_X = oxides of nitrogen; $PM_{2.5}$ = particulate matter with an aerodynamic resistance diameter of 2.5 micrometers or less; PM_{10} = particulate matter with an aerodynamic resistance diameter of 10 micrometers or less; ROG = reactive organic gases; SMAQMD = Sacramento Metropolitan Air Quality Management District
Estimates rounded.
Source: USACE 2018

The 2010 Final EIS/EIR assumed that the Reach H portion of the project would be constructed concurrently with construction in Reach E. The revised construction schedule shows that the Reach H Construction Project would be implemented in years 2018 to 2020, and Reach E would be rescheduled for 2020 through 2021. The proposed schedule revisions would result in simultaneous construction in Reach H and Reach I in 2019, and potential simultaneous construction in Reach H and Reach E in 2020. The Reach I construction contract was awarded in July 2018 and anticipates the majority of the Reach I work would occur in 2019. The Reach H construction contract is anticipated to be awarded in December 2018 and anticipates the Reach H work would occur in 2019 and 2020. The design for Reach E construction contract has not yet begun. Therefore, Table 6-2 summarizes emission estimates for concurrent construction of Reach H and I in 2019, as calculated in support of the 2018 MFR.

Table 6-2. Total Maximum Daily Emissions for Concurrent Construction of Reach H and Reach I Construction Projects

	ROG	NO_X	PM_{10}	$PM_{2.5}$
Total Maximum Daily emissions (lb/day)	23.61	204.70	99.36	27.31
SMAQMD thresholds (lb/day)	N/A	85	N/A	N/A
Exceed Thresholds?	–	Yes	–	–

Notes:
lb/day = pounds per day; N/A = not applicable; NO_X = oxides of nitrogen; $PM_{2.5}$ = particulate matter with an aerodynamic resistance diameter of 2.5 micrometers or less; PM_{10} = particulate matter with an aerodynamic resistance diameter of 10 micrometers or less; ROG = reactive organic gases; SMAQMD = Sacramento Metropolitan Air Quality Management District
Estimates rounded.
Source: USACE 2018

Maximum daily emissions generated by concurrent construction in Reaches H and I would exceed SMAQMD-recommended thresholds of significance for NO_X. As required by Mitigation Measure 4-11a in the 2010 Final EIS/EIR, USACE/SAFCA would implement standard construction mitigation measures as recommended by SMAQMD (Appendix C). SMAQMD considers implementation of these measures to be capable of reducing NO_X emissions by 20% and PM_{10} emissions from off-road construction equipment exhaust by 45%. Therefore, implementing Mitigation Measure 4-11a, which was previously adopted and incorporated into the 2010 Final EIS/EIR, would result in emissions from construction of the Reach H Project that would be less than the SMAQMD-recommended thresholds of significance. The proposed changes to the Reach H Project would not result in new or substantially more severe significant air quality impacts than were identified in the 2010 Final EIR/EIS. Therefore, no additional mitigation is required.

5.2.6 HYDROLOGY AND HYDRAULICS

Section 4.5 of the 2010 Final EIS/EIR addressed potential impacts associated with installation of seepage berms and cutoff walls to minimize seepage during high surface water conditions. The installation of two additional relief wells on the NEMDC west levee at Haggin Avenue would capture seepage water during NEMDC high water events and discharge the water to the City of Sacramento stormwater system. These wells would be needed because the existing PG&E gas pipeline prevents the installation of a continuous cutoff wall through the Haggin Avenue area. The wells would minimize the potential for groundwater to rise above the landside ground surface.

The relief wells would only operate during high-flow events in the NEMDC, which would cause artesian conditions on the landside of the levee. Such conditions are expected to occur infrequently and for limited durations.

Discharging the well water to the City of Sacramento stormwater system would avoid releasing water during high surface-flow conditions that may affect other surface resources or land uses. In addition, no impact to surface water quality would occur from well water discharge.

The installation and operation of two seepage relief wells at Haggin Avenue would not have a new or substantially more severe significant environmental impact than was identified in the 2010 Final EIS/EIR. No additional mitigation is required.

5.2.7 LAND USE, SOCIOECONOMICS, AND POPULATION AND HOUSING

Section 4.3 of the 2010 Final EIS/EIR found that no structures or improvements would be removed within the project footprint along the NEMDC South (Reach H). Since completion of the 2010 Final EIS/EIR, it has been determined that a single residence (APN 274-0142-017) is encroaching on the existing RD 1000 levee easement and must be removed to accommodate Reach H construction. The property would be acquired by SAFCA and the residence would be demolished or removed from its present location.

The acquisition and demolition of this single residence would not result in temporary or permanent disruption to a community, result in displacing a substantial number of residences or businesses, or create physical conditions that would induce urban decay, blight or other economic or social change. The demolition of the residence would generate short-term and temporary increases in noise, dust, and truck traffic that is required to transport demolition debris and equipment to and from the site.

Mitigation Measures 4.12-a, 4.12-b, and 4.12-c as described in the 2010 Final EIS/EIR, would implement noise-reducing construction practices and require preparation and implementation of a noise control plan that would minimize and reduce noise and vibration-related impacts to a less-than-significant level.

Mitigation Measure 4.11-a would implement SMAQMD-recommended control measures to minimize temporary and short-term emissions of ROG, NO_X, and PM_{10} during construction. The implementation of these measure would minimize potential dust emissions associated with the residence demolition to a less-than-significant level.

Changes to the Reach H Construction Project would also require relocation of existing fencing on several parcels that was constructed on lands within the existing RD 1000 levee easement. It is estimated that the fences would be moved about 10 to 30 feet, depending on location. The relocation of these fences would reduce the fenced-area of these parcels to the correct area described in the title documents for these properties. The proposed fence relocations would not result in an adverse impact to land use, housing, or other socioeconomic issue.

The acquisition and demolition of a single residence and relocation of fencing of six parcels would not result in new or substantially more severe significant environmental impacts than were identified in the 2010 Final EIS/EIR. No additional mitigation is required.

6 CONCLUSION

As described in this Addendum No. 3, the proposed changes to the Reach H Construction Project do not require revisions to the conclusions or findings presented in the 2010 Final EIS/EIR because no new or substantially more severe significant environmental impacts would occur. In addition, the 2010 Final EIS/EIR, previously adopted mitigation measures, and associated MMRP remain valid for assessing and mitigating identified impacts that would result from implementing the changes to the Reach H Construction Project.

Based on the discussion presented in Section 6, "Environmental Analysis," the proposed changes to the Reach H Construction Project would not result in any of the conditions described in Sections 15162 and 15163 of the State CEQA Guidelines that call for preparation of a subsequent EIR or supplemental EIR.

In summary, the proposed changes to the Reach H Construction Project would not:

- result in any new significant or potentially significant environmental effects,
- substantially increase the severity of previously identified significant effects,
- result in mitigation measures or alternatives previously found to be infeasible becoming feasible, or
- result in the availability/implementation of mitigation measures or alternatives that are considerably different from those analyzed in the prior 2010 Final EIS/EIR that would substantially reduce one or more significant or potentially significant effects on the physical environment, but the project proponents decline to adopt them.

For the foregoing reasons, no subsequent or supplemental EIR is required, and this Addendum No. 3 to the 2010 Final EIS/EIR is the appropriate CEQA document pursuant to State CEQA Guidelines Section 15164 to evaluate and document the changes to the Reach H Construction Project. No changes are needed to the certified 2010 Final EIS/EIR or the adopted MMRP for the Phase 4b Project.

7 REFERENCES

California Department of Fish and Wildlife. 2018 (November). Biogeographic Data Branch. 2018. California Natural Diversity Database Maps and Data Rarefind 5 Quickview Tool. Available: https://www.wildlife.ca.gov/Data/CNDDB/Maps-asnd-Data. Accessed November 29, 2018.

CDFW. *See* California Department of Fish and Wildlife.

Institute of Transportation Engineers. 1989. *Traffic Access and Impact Studies for Site Development.* Transportation Planners Council, Washington, DC.

ITE. *See* Institute of Transportation Engineers.

Sacramento Area Flood Control Agency. 2010. *Mitigation Monitoring and Reporting Program for the American River Watershed Common Features Project/Natomas Post-authorization Change Report/Natomas Levee Improvement Program, Phase 4b Landside Improvements Project*. State Clearinghouse No. 2009112025. Sacramento, CA.

_____. 2018a. *Addendum No. 1 to the Environmental Impact Report on the American River Watershed Common Features Project/Natomas Post-authorization Change Report/Natomas Levee Improvement Program Phase 4b Landside Improvements Project.* State Clearinghouse No. 2009112025. Sacramento, CA. Available: http://www.safca.org/protection/Environmental_Public_Review.html.

_____. 2018b. *Addendum No. 2 to the Environmental Impact Report on the American River Watershed Common Features Project/Natomas Post-authorization Change Report/Natomas Levee Improvement Program Phase 4b Landside Improvements Project.* State Clearinghouse No. 2009112025. Sacramento, CA.

SAFCA. *See* Sacramento Area Flood Control Agency.

USACE. *See* U.S. Army Corps of Engineers.

USACE and SAFCA. *See* U.S. Army Corps of Engineers and Sacramento Area Flood Control Agency.

U.S. Army Corps of Engineers. 2017 (October). *Memorandum for Record. American River Common Features Natomas Basin Project, Reach H Cutoff Wall and Landside Levee Slope Construction.* Sacramento, CA.

———. 2018 (July). *Memorandum for Record. American River Common Features Natomas Basin Project, Reach H Construction Schedule Updates*. Sacramento, CA.

U.S. Army Corps of Engineers and Sacramento Area Flood Control Agency. 2009a (May). *Final Environmental Impact Report on the Natomas Levee Improvement Program Phase 3 Landside Improvements Project.* State Clearinghouse No. 2007062016. Sacramento, CA.

———. 2009b (November). *Final Environmental Impact Report on the Natomas Levee Improvement Program Phase 4a Landside Improvements Project.* State Clearinghouse No. 2009032097. Prepared by EDAW, Sacramento, CA.

———. 2010 (October). *Final Environmental Impact Statement and Environmental Impact Report on the American River Common Features Project/Natomas Post-Authorization Change Report/Natomas Levee Improvement Program, Phase 4b Landside Improvements Project*. State Clearinghouse No. 2009112025. Sacramento, CA. Available: http://www.safca.org/protection/Environmental_Public_Review.html.

U.S. Fish and Wildlife Service. 2016 (August). Reinitiation of Formal Consultation on the Natomas Levee Improvement Program's Landside Improvements Phase 4b Project, Sacramento and Sutter Counties, California. Submitted to U.S. Army Corps of Engineers, Sacramento District, 11 August 2016.

———. 2017 (May). Consultation Code: 08ESMF00-2017-SLI-2159. List of threatened and endangered species that may occur in your proposed project location, and/or may be affected by your proposed project. Submitted to U.S. Army Corps of Engineers, Sacramento District, 24 May 2017.

USFWS. *See* U.S. Fish and Wildlife Service.

APPENDIX A

Plates

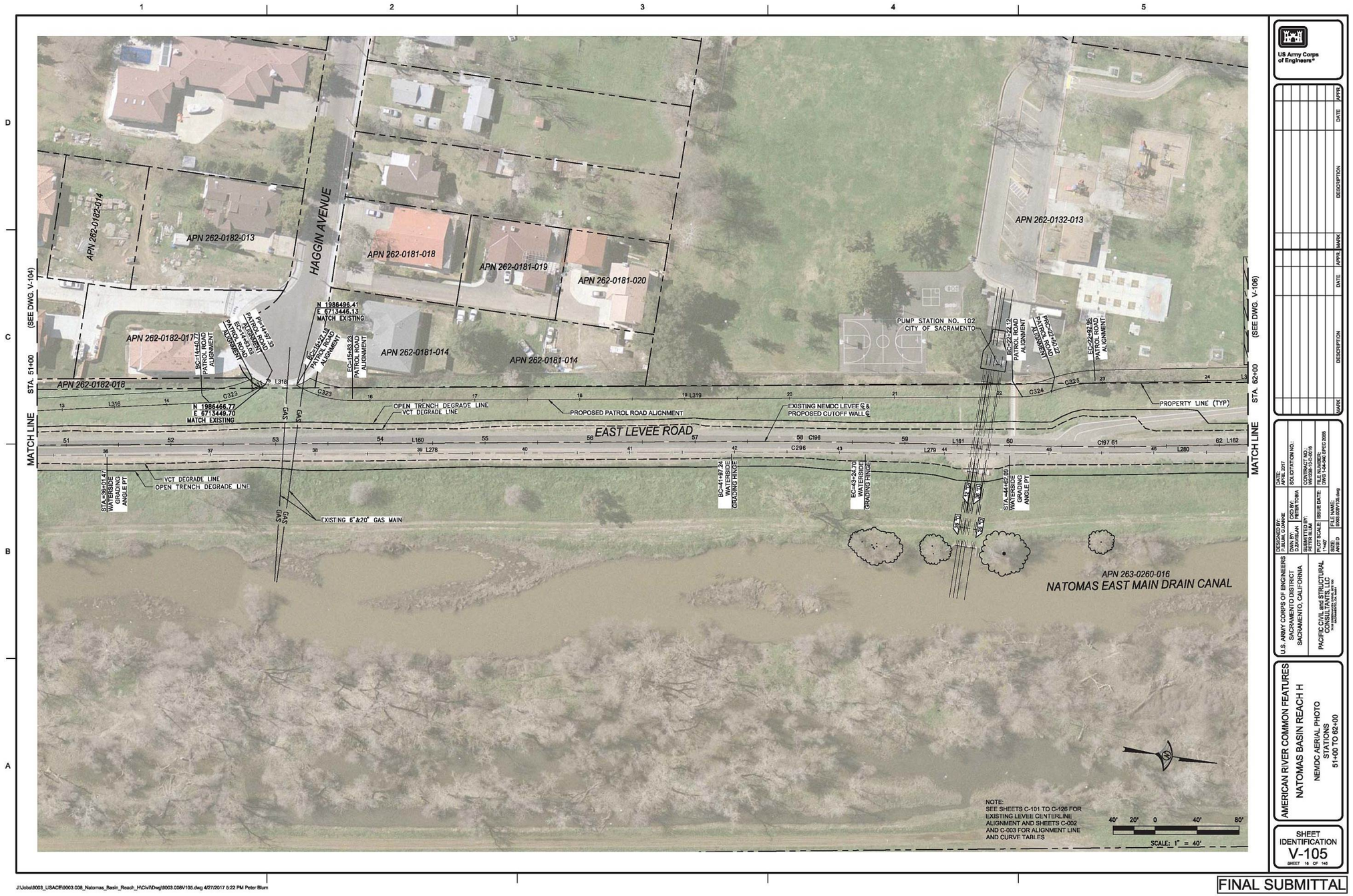

US Army Corps of Engineers®

MARK	DESCRIPTION	DATE	APPR.	MARK	DESCRIPTION	DATE	APPR.

U.S. ARMY CORPS OF ENGINEERS
SACRAMENTO DISTRICT
SACRAMENTO, CALIFORNIA

PACIFIC CIVIL and STRUCTURAL CONSULTANTS, LLC
1144 Westbrooke Drive, Suite 100
Folsom, California 95630

DESIGNED BY: P. BLUM, G.CANOE
DWN. BY: D.WILLIAMSON
CKD. BY: P.TOMA
SUBMITTED BY: PETER BLUM
PLOT SCALE: 1"=40'
SIZE: ANSI D
DATE: APRIL 2017
SOLICITATION NO.:
CONTRACT NO.: W912GB-15-D-0016
TO 0006
ISSUE DATE:
FILE NAME: 9003.008V105.dwg

AMERICAN RIVER COMMON FEATURES
NATOMAS BASIN REACH H
NEMDC AERIAL PHOTO
STATIONS
51+00 TO 62+00

SHEET IDENTIFICATION
V-105
SHEET 15 OF 145

J:\Jobs\9003_USACE\9003.008_Natomas_Basin_Reach_H\Civil\Dwg\9003.008V105.dwg 4/27/2017 5:22 PM Peter Blum

FINAL SUBMITTAL

Plate 1

APN 237-0011-029
APN 237-0011-028
APN 237-0011-016
APN 237-0011-046
APN 237-0011-057
APN 237-0011-071
RD 1000 PUMPING PLANT NO. 8
NORTHGATE BLVD
APN 237-0031-051
APN 237-0031-042
APN 237-0012-013
STOCKPILE/ STAGING AREA
APN 237-0031-039
APN 237-0031-037
EXISTING NEMDC LEVEE ℄
PROPERTY LINE (TYP)
PROPOSED PATROL ROAD ALIGNMENT
EAST LEVEE ROAD
APN 237-0031-038
WATERSIDE GRADING HINGE ALIGNMENT
NATOMAS EAST MAIN DRAIN CANAL
MATCH LINE
STA. 172+00
STA. 183+00
(SEE DWG. V-115)
(SEE DWG. V-117)
NOTE:
SEE SHEETS C-101 TO C-126 FOR EXISTING LEVEE CENTERLINE ALIGNMENT AND SHEETS C-002 AND C-003 FOR ALIGNMENT LINE AND CURVE TABLES
SCALE: 1" = 40'
US Army Corps of Engineers
AMERICAN RIVER COMMON FEATURES
NATOMAS BASIN REACH H
NEMDC AERIAL PHOTO STATIONS 172+00 TO 183+00
SHEET IDENTIFICATION
V-116
FINAL SUBMITTAL

Plate 2

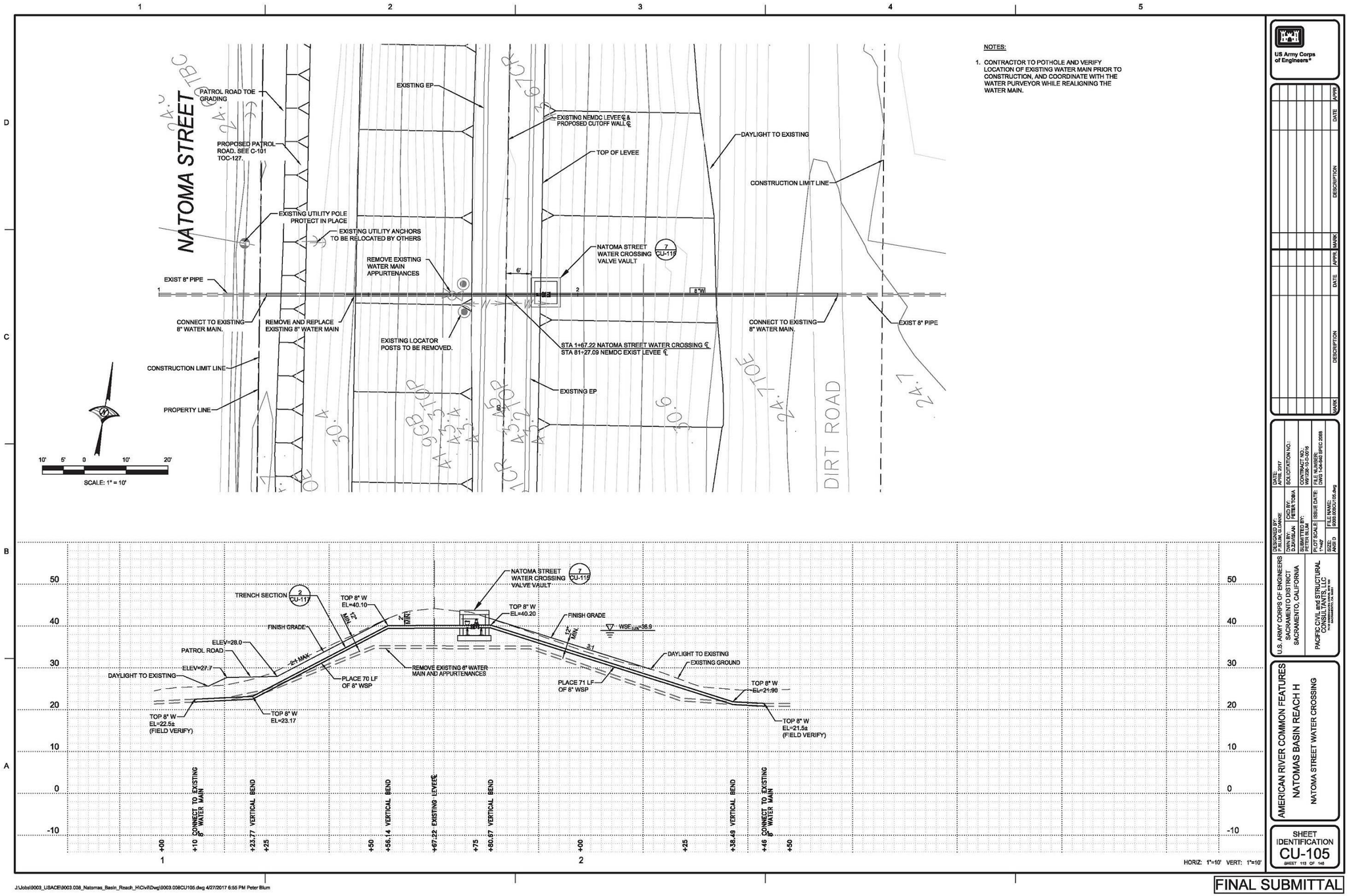

NOTES:

1. CONTRACTOR TO POTHOLE AND VERIFY LOCATION OF EXISTING WATER MAIN PRIOR TO CONSTRUCTION, AND COORDINATE WITH THE WATER PURVEYOR WHILE REALIGNING THE WATER MAIN.

US Army Corps of Engineers®

MARK	DESCRIPTION	DATE	APPR.

MARK	DESCRIPTION	DATE	APPR.

DESIGNED BY: P.BLUM, G.LANE
DATE: APRIL 2017
DWN BY: D.DAVISON
CKD BY: PETER TOBIA
SOLICITATION NO.:
SUPERVISED BY: PETER KLEM
CONTRACT NO.: W912QR-15-D-0016
PLOT SCALE: 1"=40'
ISSUE DATE:
FILE NUMBER: DWG 1-34-082 SPEC 2008
PLOT DATE: 4/28/17
FILE NAME: 9003.008CU105.dwg

U.S. ARMY CORPS OF ENGINEERS
SACRAMENTO DISTRICT
SACRAMENTO, CALIFORNIA

PACIFIC CIVIL and STRUCTURAL CONSULTANTS, LLC
Two Embarcadero Center, Suite 1500
San Francisco, CA 94111

AMERICAN RIVER COMMON FEATURES
NATOMAS BASIN REACH H
NATOMA STREET WATER CROSSING

SHEET IDENTIFICATION
CU-105
SHEET 119 OF 146

FINAL SUBMITTAL

J:\Jobs\9003_USACE\9003.008_Natomas_Basin_Reach_H\Civil\Dwg\9003.008CU105.dwg 4/27/2017 6:55 PM Peter Blum

Plate 3

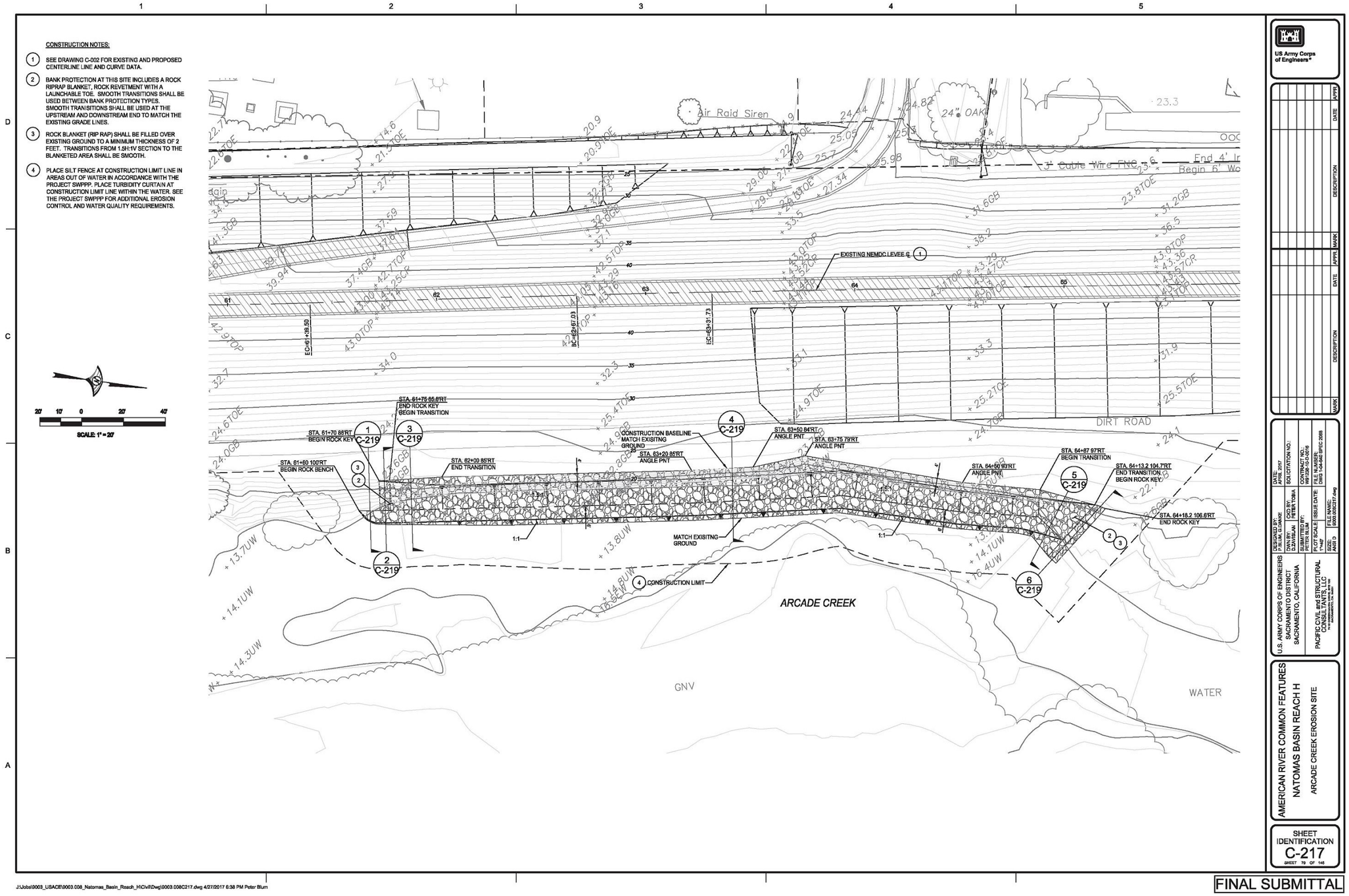
CONSTRUCTION NOTES:
1 SEE DRAWING C-002 FOR EXISTING AND PROPOSED CENTERLINE LINE AND CURVE DATA.
2 BANK PROTECTION AT THIS SITE INCLUDES A ROCK RIPRAP BLANKET, ROCK REVETMENT WITH A LAUNCHABLE TOE. SMOOTH TRANSITIONS SHALL BE USED BETWEEN BANK PROTECTION TYPES. SMOOTH TRANSITIONS SHALL BE USED AT THE UPSTREAM AND DOWNSTREAM END TO MATCH THE EXISTING GRADE LINES.
3 ROCK BLANKET (RIP RAP) SHALL BE FILLED OVER EXISTING GROUND TO A MINIMUM THICKNESS OF 2 FEET. TRANSITIONS FROM 1.5H:1V SECTION TO THE BLANKETED AREA SHALL BE SMOOTH.
4 PLACE SILT FENCE AT CONSTRUCTION LIMIT LINE IN AREAS OUT OF WATER IN ACCORDANCE WITH THE PROJECT SWPPP. PLACE TURBIDITY CURTAIN AT CONSTRUCTION LIMIT LINE WITHIN THE WATER. SEE THE PROJECT SWPPP FOR ADDITIONAL EROSION CONTROL AND WATER QUALITY REQUIREMENTS.
SCALE: 1" = 20'
Air Raid Siren
24" OAK
3" Cable Wire FNC
EXISTING NEMDC LEVEE ℄
DIRT ROAD
STA. 61+75.85'RT END ROCK KEY BEGIN TRANSITION
STA. 61+70.88'RT BEGIN ROCK KEY
STA. 61+60.100'RT BEGIN ROCK BENCH
STA. 62+00.85'RT END TRANSITION
CONSTRUCTION BASELINE MATCH EXISITNG GROUND
STA. 63+20.85'RT ANGLE PNT
STA. 63+50.84'RT ANGLE PNT
STA. 63+75.79'RT ANGLE PNT
STA. 64+50.93'RT ANGLE PNT
STA. 64+87.97'RT BEGIN TRANSITION
STA. 64+13.2 104.7'RT END TRANSITION BEGIN ROCK KEY
STA. 64+18.2 106.6'RT END ROCK KEY
MATCH EXISITNG GROUND
CONSTRUCTION LIMIT
ARCADE CREEK
GNV
WATER
US Army Corps of Engineers
AMERICAN RIVER COMMON FEATURES
NATOMAS BASIN REACH H
ARCADE CREEK EROSION SITE
SHEET IDENTIFICATION
C-217
FINAL SUBMITTAL

Plate 4

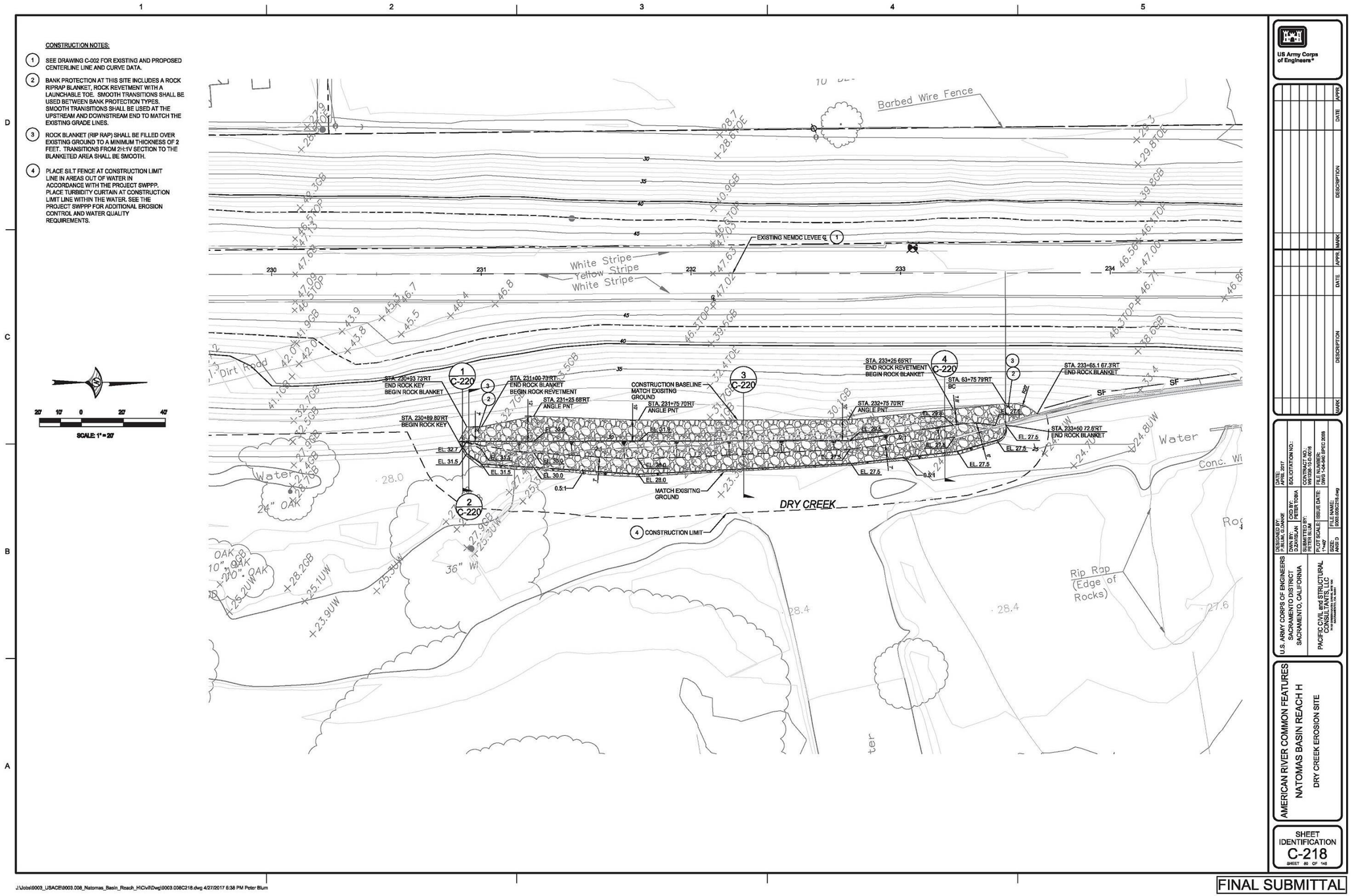
CONSTRUCTION NOTES:
1 SEE DRAWING C-002 FOR EXISTING AND PROPOSED CENTERLINE LINE AND CURVE DATA.
2 BANK PROTECTION AT THIS SITE INCLUDES A ROCK RIPRAP BLANKET, ROCK REVETMENT WITH A LAUNCHABLE TOE. SMOOTH TRANSITIONS SHALL BE USED BETWEEN BANK PROTECTION TYPES. SMOOTH TRANSITIONS SHALL BE USED AT THE UPSTREAM AND DOWNSTREAM END TO MATCH THE EXISTING GRADE LINES.
3 ROCK BLANKET (RIP RAP) SHALL BE FILLED OVER EXISTING GROUND TO A MINIMUM THICKNESS OF 2 FEET. TRANSITIONS FROM 2H:1V SECTION TO THE BLANKETED AREA SHALL BE SMOOTH.
4 PLACE SILT FENCE AT CONSTRUCTION LIMIT LINE IN AREAS OUT OF WATER IN ACCORDANCE WITH THE PROJECT SWPPP. PLACE TURBIDITY CURTAIN AT CONSTRUCTION LIMIT LINE WITHIN THE WATER. SEE THE PROJECT SWPPP FOR ADDITIONAL EROSION CONTROL AND WATER QUALITY REQUIREMENTS.
SCALE: 1" = 20'
Barbed Wire Fence
EXISTING NEMDC LEVEE ℄
White Stripe
Yellow Stripe
White Stripe
Dirt Road
STA. 230+93 79'RT END ROCK KEY BEGIN ROCK BLANKET
STA. 230+89 80'RT BEGIN ROCK KEY
STA. 231+00 79'RT END ROCK BLANKET BEGIN ROCK REVETMENT
STA. 231+25 68'RT ANGLE PNT
CONSTRUCTION BASELINE MATCH EXISITNG GROUND
STA. 231+75 70'RT ANGLE PNT
MATCH EXISITNG GROUND
STA. 232+75 70'RT ANGLE PNT
STA. 233+25 65'RT END ROCK REVETMENT BEGIN ROCK BLANKET
STA. 63+75 79'RT BC
STA. 233+65.1 67.3'RT END ROCK BLANKET
STA. 233+50 72.6'RT END ROCK BLANKET
DRY CREEK
CONSTRUCTION LIMIT
Water
Conc. Wi
24" OAK
36" W
Rip Rap (Edge of Rocks)
SF
0.5:1
U.S. ARMY CORPS OF ENGINEERS SACRAMENTO DISTRICT SACRAMENTO, CALIFORNIA
PACIFIC CIVIL and STRUCTURAL CONSULTANTS, LLC
AMERICAN RIVER COMMON FEATURES
NATOMAS BASIN REACH H
DRY CREEK EROSION SITE
SHEET IDENTIFICATION
C-218
SHEET 80 OF 148
FINAL SUBMITTAL

Plate 5

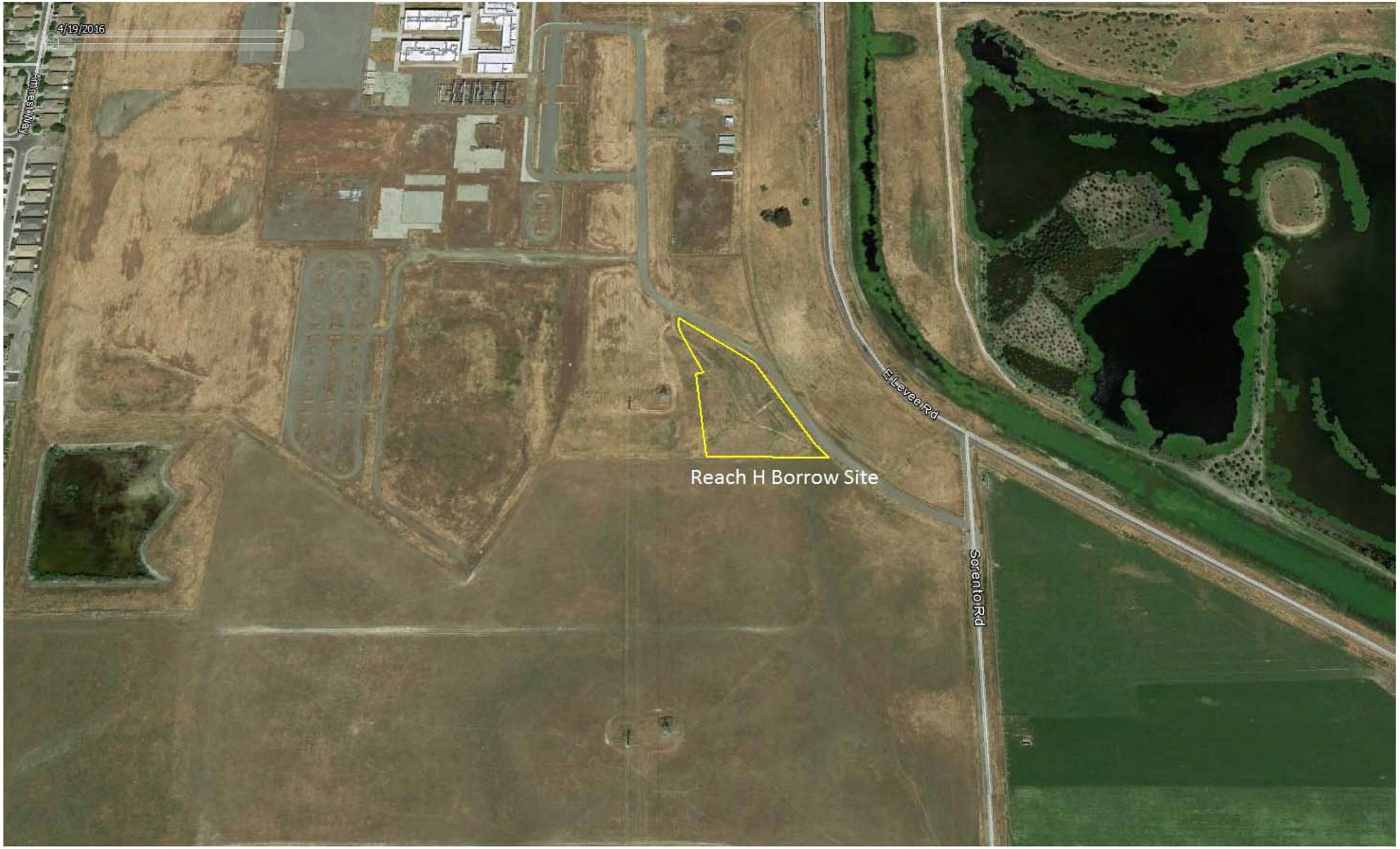
4/19/2016
Arnoest Way
E Levee Rd
Reach H Borrow Site
Sorento Rd

Plate 6

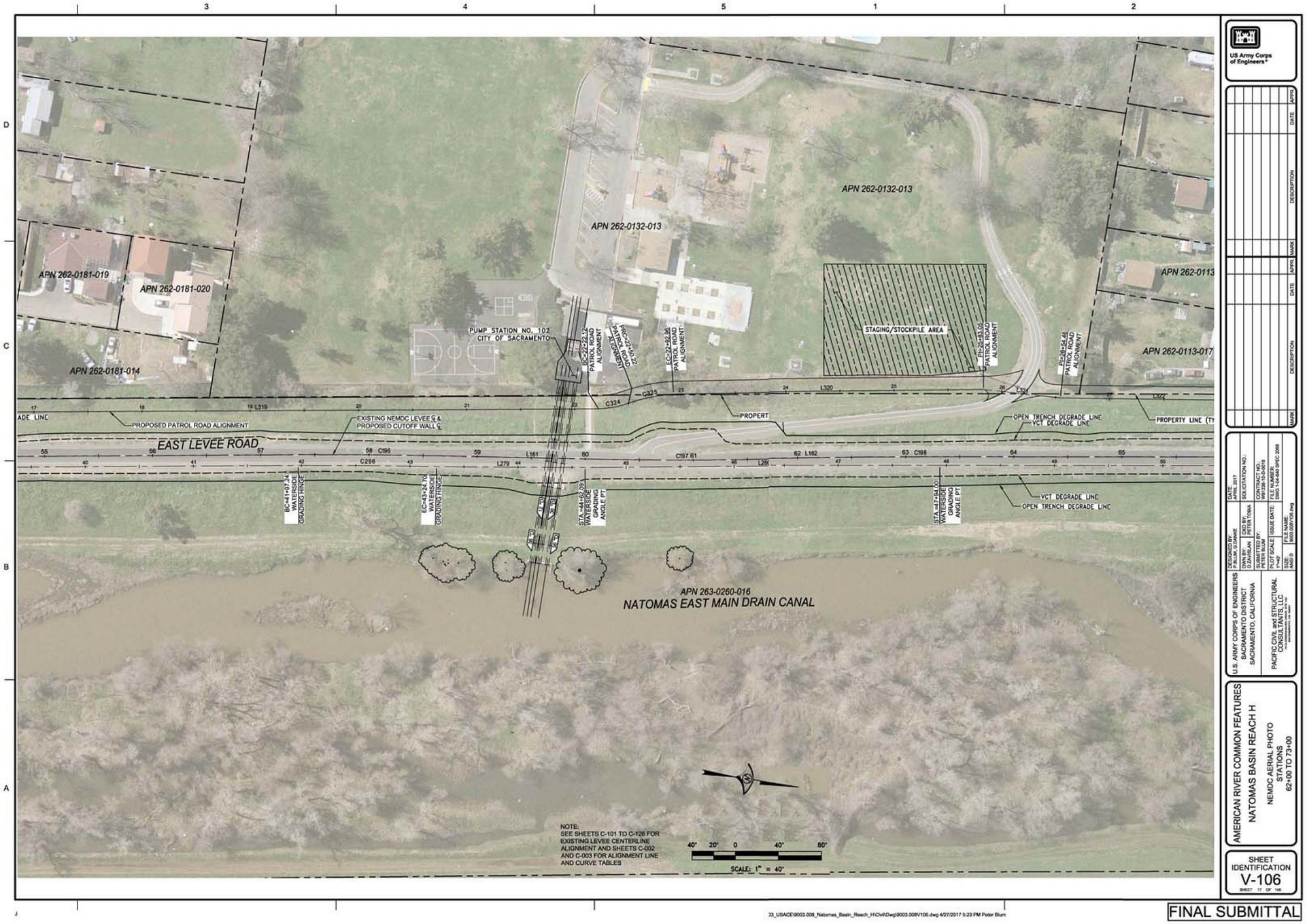
APN 262-0181-019
APN 262-0181-020
APN 262-0181-014
APN 262-0132-013
APN 262-0132-013
APN 262-0113
APN 262-0113-017
PUMP STATION NO. 102
CITY OF SACRAMENTO
STAGING/STOCKPILE AREA
PROPOSED PATROL ROAD ALIGNMENT
EXISTING NEMDC LEVEE ℄ &
PROPOSED CUTOFF WALL ℄
EAST LEVEE ROAD
PROPERT
OPEN TRENCH DEGRADE LINE
VCT DEGRADE LINE
PROPERTY LINE (TY
VCT DEGRADE LINE
OPEN TRENCH DEGRADE LINE
APN 263-0260-016
NATOMAS EAST MAIN DRAIN CANAL
NOTE:
SEE SHEETS C-101 TO C-126 FOR
EXISTING LEVEE CENTERLINE
ALIGNMENT AND SHEETS C-002
AND C-003 FOR ALIGNMENT LINE
AND CURVE TABLES
SCALE: 1" = 40'
US Army Corps of Engineers
AMERICAN RIVER COMMON FEATURES
NATOMAS BASIN REACH H
NEMDC AERIAL PHOTO
STATIONS
62+00 TO 73+00
SHEET IDENTIFICATION
V-106
FINAL SUBMITTAL

Plate 7

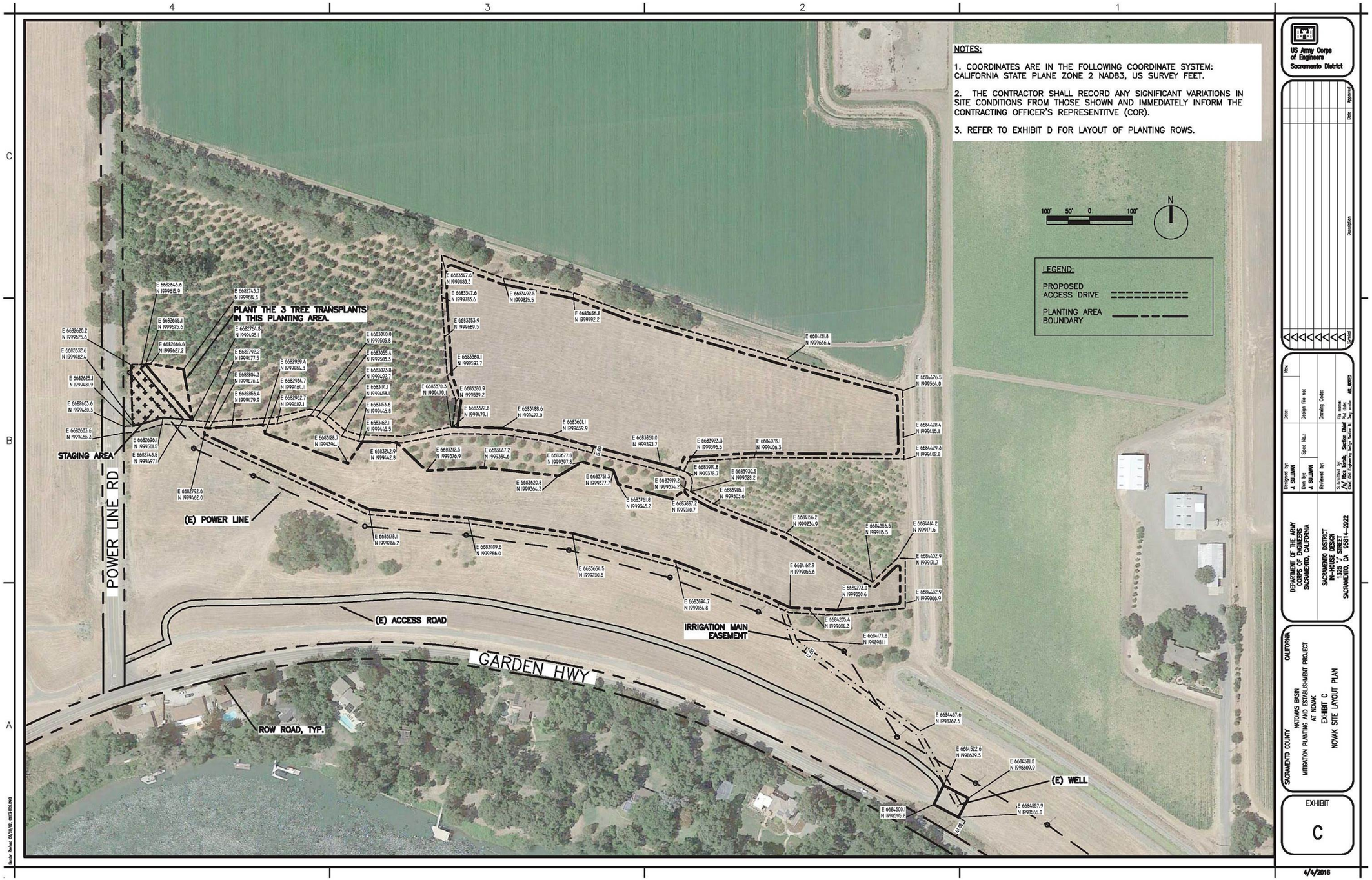
NOTES:
1. COORDINATES ARE IN THE FOLLOWING COORDINATE SYSTEM: CALIFORNIA STATE PLANE ZONE 2 NAD83, US SURVEY FEET.
2. THE CONTRACTOR SHALL RECORD ANY SIGNIFICANT VARIATIONS IN SITE CONDITIONS FROM THOSE SHOWN AND IMMEDIATELY INFORM THE CONTRACTING OFFICER'S REPRESENTITVE (COR).
3. REFER TO EXHIBIT D FOR LAYOUT OF PLANTING ROWS.
LEGEND:
PROPOSED ACCESS DRIVE
PLANTING AREA BOUNDARY
100' 50' 0 100'
N
PLANT THE 3 TREE TRANSPLANTS IN THIS PLANTING AREA.
STAGING AREA
POWER LINE RD
(E) POWER LINE
(E) ACCESS ROAD
GARDEN HWY
ROW ROAD, TYP.
IRRIGATION MAIN EASEMENT
(E) WELL
US Army Corps of Engineers Sacramento District
DEPARTMENT OF THE ARMY CORPS OF ENGINEERS SACRAMENTO, CALIFORNIA
SACRAMENTO DISTRICT 1325 "J" STREET SACRAMENTO, CA 95814-2922
SACRAMENTO COUNTY CALIFORNIA
NATOMAS BASIN
MITIGATION PLANTING AND ESTABLISHMENT PROJECT AT NOVAK
EXHIBIT C
NOVAK SITE LAYOUT PLAN
EXHIBIT
C
4/4/2016

Plate 8

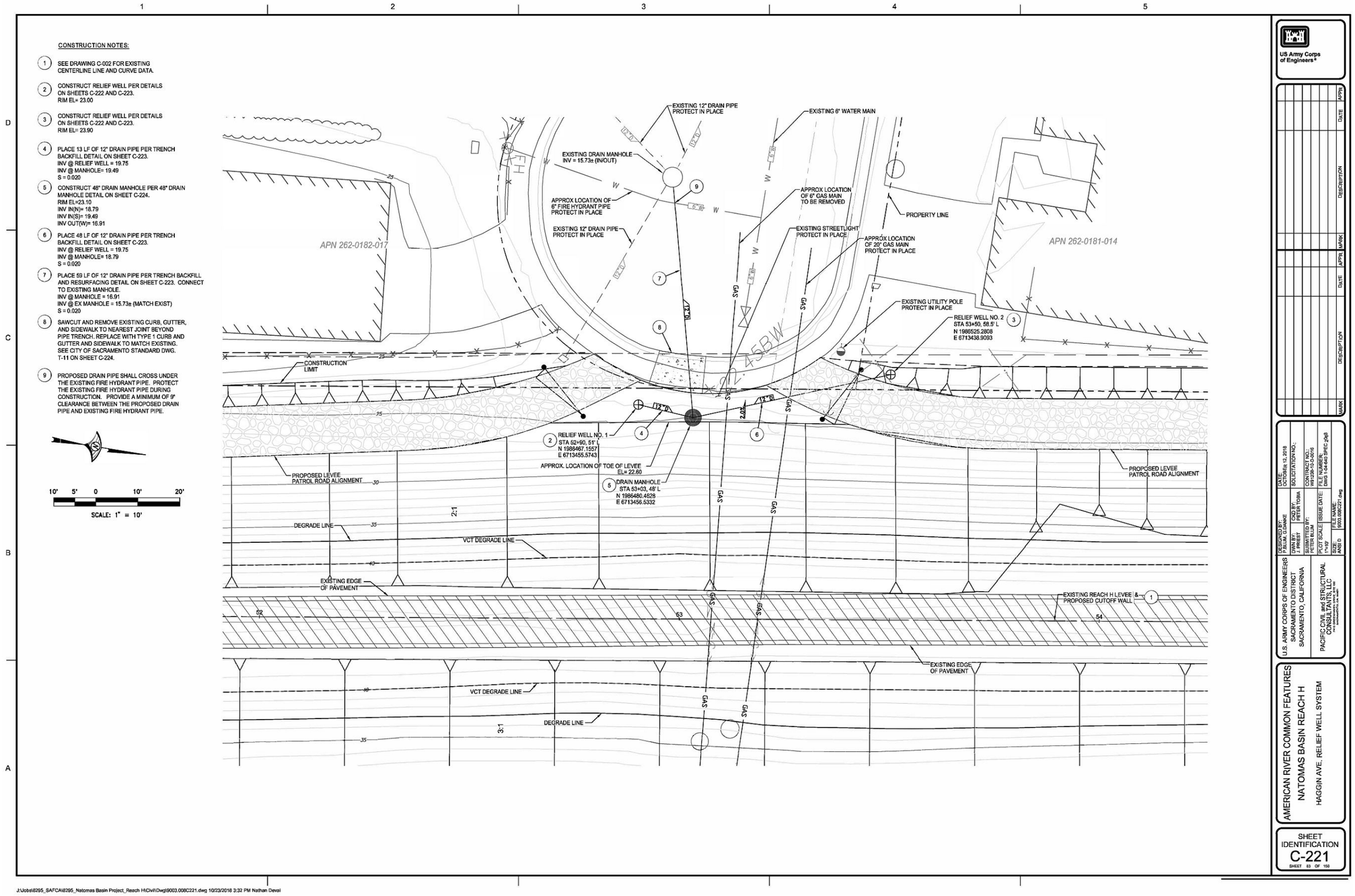
CONSTRUCTION NOTES:
1 SEE DRAWING C-002 FOR EXISTING CENTERLINE LINE AND CURVE DATA.
2 CONSTRUCT RELIEF WELL PER DETAILS ON SHEETS C-222 AND C-223. RIM EL= 23.00
3 CONSTRUCT RELIEF WELL PER DETAILS ON SHEETS C-222 AND C-223. RIM EL= 23.90
4 PLACE 13 LF OF 12" DRAIN PIPE PER TRENCH BACKFILL DETAIL ON SHEET C-223. INV @ RELIEF WELL = 19.75 INV @ MANHOLE= 19.49 S = 0.020
5 CONSTRUCT 48" DRAIN MANHOLE PER 48" DRAIN MANHOLE DETAIL ON SHEET C-224. RIM EL=23.10 INV IN(N)= 18.79 INV IN(S)= 19.49 INV OUT(W)= 16.91
6 PLACE 48 LF OF 12" DRAIN PIPE PER TRENCH BACKFILL DETAIL ON SHEET C-223. INV @ RELIEF WELL = 19.75 INV @ MANHOLE= 18.79 S = 0.020
7 PLACE 59 LF OF 12" DRAIN PIPE PER TRENCH BACKFILL AND RESURFACING DETAIL ON SHEET C-223. CONNECT TO EXISTING MANHOLE. INV @ MANHOLE = 16.91 INV @ EX MANHOLE = 15.73± (MATCH EXIST) S = 0.020
8 SAWCUT AND REMOVE EXISTING CURB, GUTTER, AND SIDEWALK TO NEAREST JOINT BEYOND PIPE TRENCH. REPLACE WITH TYPE 1 CURB AND GUTTER AND SIDEWALK TO MATCH EXISTING. SEE CITY OF SACRAMENTO STANDARD DWG. T-11 ON SHEET C-224.
9 PROPOSED DRAIN PIPE SHALL CROSS UNDER THE EXISTING FIRE HYDRANT PIPE. PROTECT THE EXISTING FIRE HYDRANT PIPE DURING CONSTRUCTION. PROVIDE A MINIMUM OF 9" CLEARANCE BETWEEN THE PROPOSED DRAIN PIPE AND EXISTING FIRE HYDRANT PIPE.
10' 5' 0 10' 20'
SCALE: 1" = 10'
EXISTING 12" DRAIN PIPE PROTECT IN PLACE
EXISTING 6" WATER MAIN
EXISTING DRAIN MANHOLE INV = 15.73± (IN/OUT)
APPROX LOCATION OF 6" FIRE HYDRANT PIPE PROTECT IN PLACE
EXISTING 12" DRAIN PIPE PROTECT IN PLACE
APPROX LOCATION OF 6" GAS MAIN TO BE REMOVED
EXISTING STREETLIGHT PROTECT IN PLACE
APPROX LOCATION OF 20" GAS MAIN PROTECT IN PLACE
PROPERTY LINE
APN 262-0182-017
APN 262-0181-014
EXISTING UTILITY POLE PROTECT IN PLACE
RELIEF WELL NO. 2 STA 53+50, 58.5' L N 1986525.2808 E 6713438.9093
CONSTRUCTION LIMIT
RELIEF WELL NO. 1 STA 52+90, 51' L N 1986467.1557 E 6713455.5743
APPROX. LOCATION OF TOE OF LEVEE EL= 22.60
DRAIN MANHOLE STA 53+03, 48' L N 1986480.4628 E 6713456.5332
PROPOSED LEVEE PATROL ROAD ALIGNMENT
DEGRADE LINE
VCT DEGRADE LINE
EXISTING EDGE OF PAVEMENT
EXISTING REACH H LEVEE & PROPOSED CUTOFF WALL
GAS
US Army Corps of Engineers
MARK DESCRIPTION DATE APPR. MARK DESCRIPTION DATE APPR.
DESIGNED BY: PETER TOMA
DWN BY: J. PRIEST
CKD BY: PETER TOMA
SUBMITTED BY: PETER TOMA
DATE: Feb 13, 2018
SOLICITATION NO.:
CONTRACT NO.:
W912PL-18-B-0016
FILE NUMBER:
DWG 1-34-640 SPEC 2-68
PLOT SCALE: 1"=10'
ISSUE DATE:
FILENAME: 9003.008C221.dwg
SIZE: ANSI D
U.S. ARMY CORPS OF ENGINEERS SACRAMENTO DISTRICT SACRAMENTO, CALIFORNIA
PACIFIC CIVIL and STRUCTURAL CONSULTANTS, LLC
AMERICAN RIVER COMMON FEATURES
NATOMAS BASIN REACH H
HAGGIN AVE. RELIEF WELL SYSTEM
SHEET IDENTIFICATION
C-221
SHEET 83 OF 150
J:\Jobs\8295_SAFCA\8295_Natomas Basin Project_Reach H\Civil\Dwg\9003.008C221.dwg 10/23/2018 3:32 PM Nathan Deval

Plate 9

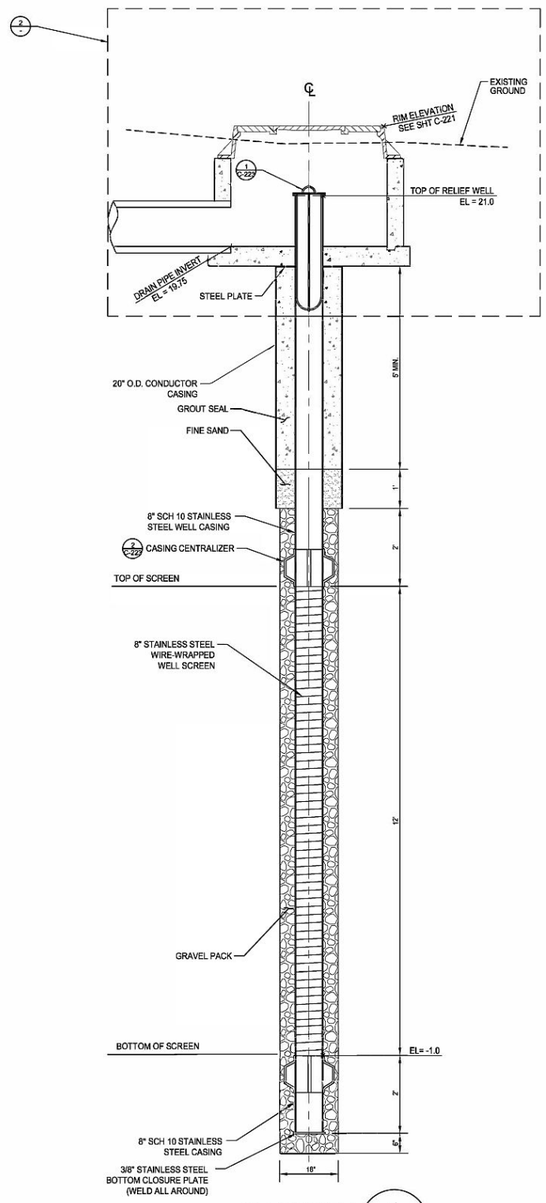

RELIEF WELL 1 / -
NTS

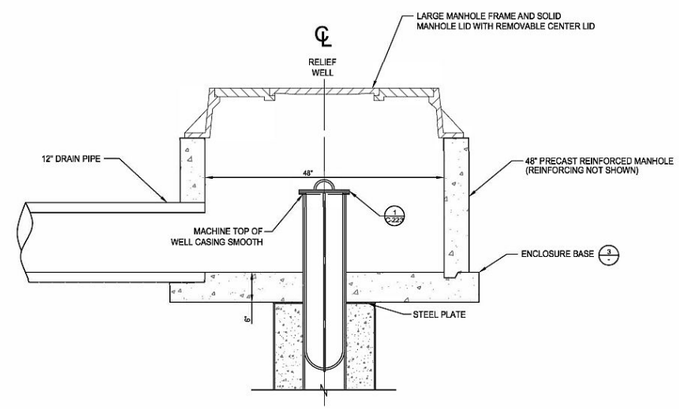

RELIEF WELL ENCLOSURE DETAIL 2 / -
NTS

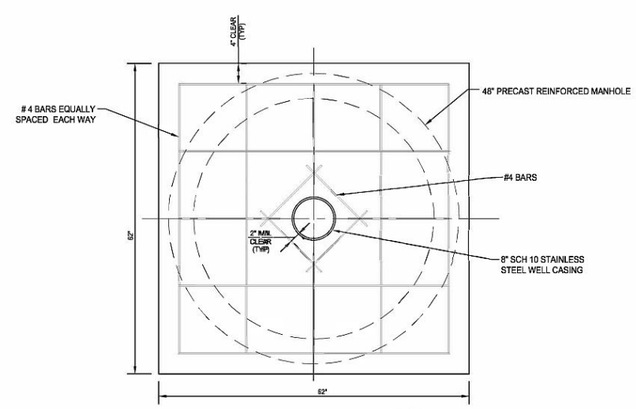

ENCLOSURE BASE 3 / -
NTS

CONSTRUCTION NOTES:

1. INSTALL VALVES, ANCHOR BOLTS, AND APPURTENANCES IN ACCORDANCE WITH MANUFACTURER RECOMMENDATIONS.

US Army Corps of Engineers®

MARK	DESCRIPTION	DATE	APPR.	MARK	DESCRIPTION	DATE	APPR.

U.S. ARMY CORPS OF ENGINEERS
SACRAMENTO DISTRICT
SACRAMENTO, CALIFORNIA

PACIFIC CIVIL and STRUCTURAL CONSULTANTS, LLC
Sacramento, CA 95825

DESIGNED BY: P. BLUM, G.DAKKE
DWN BY: D.MORGAN
CKD BY: P.BLUM, TOBIA
SUBMITTED BY: PETER BLUM
DATE: OCTOBER 12, 2018
SOLICITATION NO.: W912B-18-B-0016
CONTRACT NO.: W912B-18-C-0016
PLOT SCALE: 1:1
PLOT DATE: 10/23/2018
ISSUE DATE: FWS 15-04-SPEC-2968
SIZE: ANSI D
FILE NAME: 8003.008C222.dwg

AMERICAN RIVER COMMON FEATURES
NATOMAS BASIN REACH H
RELIEF WELL DETAILS
1 OF 2

SHEET IDENTIFICATION
C-222
SHEET 84 OF 150

J:\Jobs\8295_SAFCA\8295_Natomas Basin Project_Reach H\Civil\Dwg\8003.008C222.dwg 10/23/2018 3:32 PM Nathan Doval

Plate 10

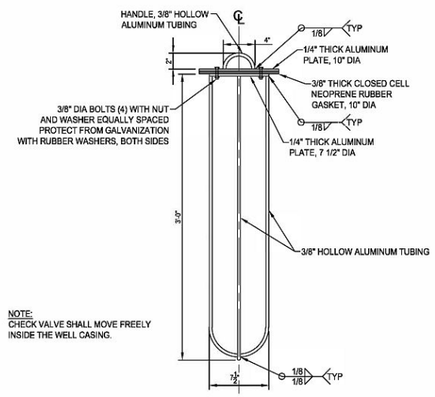

CHECK VALVE DETAIL 1/-
NTS

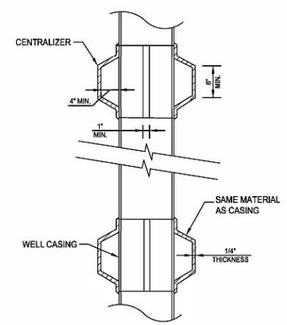

CASING CENTRALIZER DETAIL 2/-
NTS

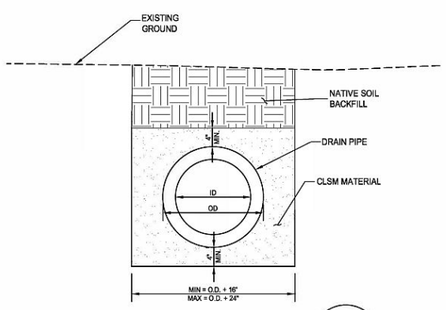

TRENCH BACKFILL DETAIL 3/-
NTS

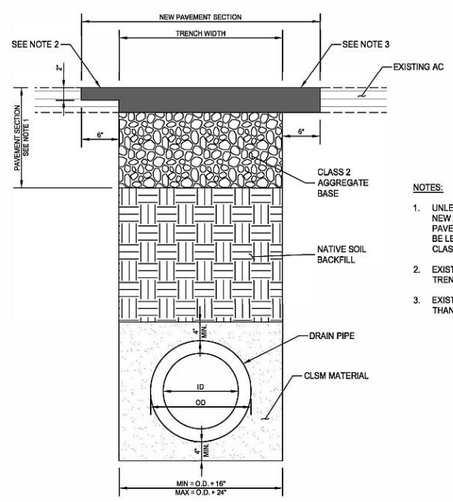

NOTES:

1. UNLESS OTHERWISE INDICATED IN THE CONTRACT DOCUMENTS, THE NEW PAVEMENT SHALL CONFORM TO THE TYPE AND THICKNESS OF THE PAVEMENT REMOVED. IN NO CASE SHALL THE NEW PAVEMENT SECTION BE LESS THAN FOUR INCHES (4") OF AC ON TWELVE INCHES (12") OF CLASS 2 AGGREGATE BASE.
2. EXISTING AC > 4" THICK: GRIND EXISTING AC 2" DEEP AND 6" WIDER THAN TRENCH ON BOTH SIDES. PLACE NEW AC.
3. EXISTING AC < OR = 4" THICK: SAW CUT AND PLACE NEW AC 6" WIDER THAN TRENCH ON BOTH SIDES.

TRENCH BACKFILL AND RESURFACING DETAIL 4/-
NTS

US Army Corps of Engineers®

MARK	DESCRIPTION	DATE	APPR.	MARK	DESCRIPTION	DATE	APPR.

DESIGNED BY: P.BLUM, G.DAHME
DWN BY: D.WOODMAN
CKD BY: PETER TOBIA
SUBMITTED BY: PETER BLUM
DATE: OCTOBER 12, 2018
SOLICITATION NO.:
CONTRACT NO.: W912dS-10-D-0016
ISSUE DATE:
DACW51-10-F-0016
SIZE: ANSI D
PLOT SCALE: 1:1
PLOT DATE:
FILE NAME: 9003.008C223.dwg

U.S. ARMY CORPS OF ENGINEERS
SACRAMENTO DISTRICT
SACRAMENTO, CALIFORNIA

PACIFIC CIVIL and STRUCTURAL CONSULTANTS, LLC
Sacramento, CA 95833

AMERICAN RIVER COMMON FEATURES
NATOMAS BASIN REACH H
RELIEF WELL DETAILS
2 OF 2

SHEET IDENTIFICATION
C-223
SHEET 88 OF 100

J:\Jobs\8295_SAFCA\8295_Natomas Basin Project_Reach H\Civil\Dwg\9003.008C223.dwg 10/23/2018 3:32 PM Nathan Deval

Plate 11

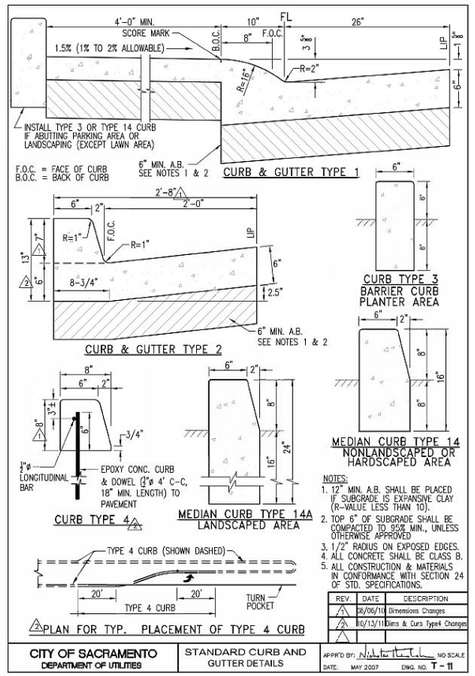

CITY OF SACRAMENTO STANDARD DWG T-11 (1 / -)
NTS

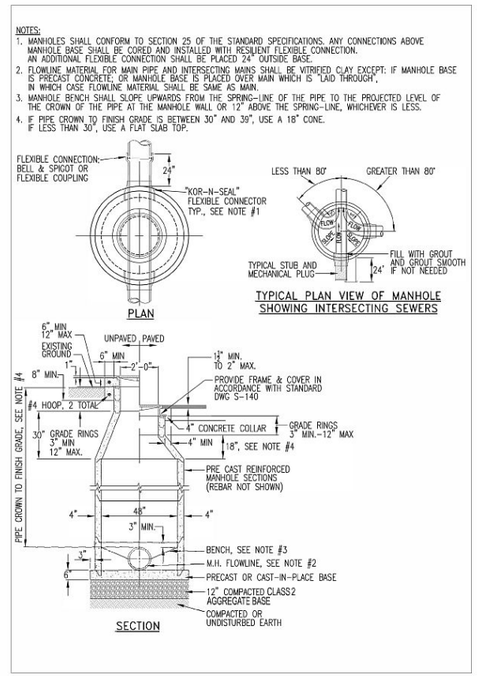

48" DRAIN MANHOLE DETAIL (2 / -)
NTS

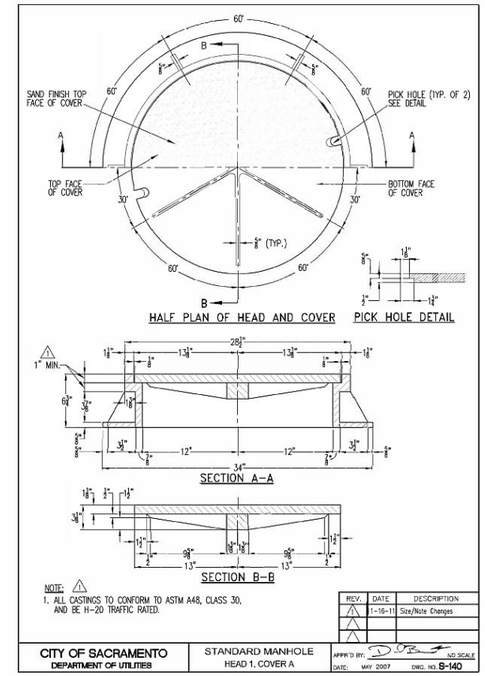

CITY OF SACRAMENTO STANDARD DWG S-140 (3 / -)
NTS

NOTES:

1. CLASS B CONCRETE SHALL CONFORM TO CLASS 4A CONCRETE WITH 3/4-INCH MAXIMUM AGGREGATE SIZE IN ACCORDANCE WITH SECTION 03 30 00 OF THE PROJECT SPECIFICATIONS.

2. ALL REFERENCES TO THE STANDARD SPECIFICATIONS IN THE DETAILS ABOVE REFER TO THE CITY OF SACRAMENTO STANDARD SPECIFICATIONS FOR PUBLIC CONSTRUCTION, LATEST EDITION. COPIES OF THE CITY OF SACRAMENTO STANDARD SPECIFICATIONS FOR PUBLIC CONSTRUCTION CAN BE OBTAINED THROUGH THE CITY OF SACRAMENTO PROCUREMENT SERVICES, 915 I STREET, 2ND FLOOR, SACRAMENTO, CA, OR BY VISITING THE FOLLOWING WEBSITE:
https://www.cityofsacramento.org/Finance/Procurement/Construction-Specifications

US Army Corps of Engineers®

MARK	DESCRIPTION	DATE	APPR.	MARK	DESCRIPTION	DATE	APPR.

DESIGNED BY: P.BLUM, G.GANNE
DATE: OCTOBER 12, 2018
DWN BY: J.ANDERSON
CKD BY: PETER TOMA
SOLICITATION NO.:
SUBMITTED BY: PETER BLUM
CONTRACT NO.: W912GB-10-D-0016
PLOT SCALE: NO SCALE
ISSUE DATE:
PLOT DATE:
SIZE: ANSI D
FILE NUMBER: [009.10-04-01 SPEC 20a]
FILE NAME: 9003.008C224.dwg

U.S. ARMY CORPS OF ENGINEERS
SACRAMENTO DISTRICT
SACRAMENTO, CALIFORNIA

PACIFIC CIVIL and STRUCTURAL CONSULTANTS, LLC
SACRAMENTO, CALIFORNIA

AMERICAN RIVER COMMON FEATURES
NATOMAS BASIN REACH H
CURB AND GUTTER, TRENCH BACKFILL, AND MANHOLE COVER DETAILS

SHEET IDENTIFICATION
C-224
SHEET 86 OF 150

J:\Jobs\8295 SAFCA\8295 Natomas Basin Project Reach H\Civil\Dwg\9003.008C224.dwg 10/23/2018 3:32 PM Nathan Deval

Plate 12

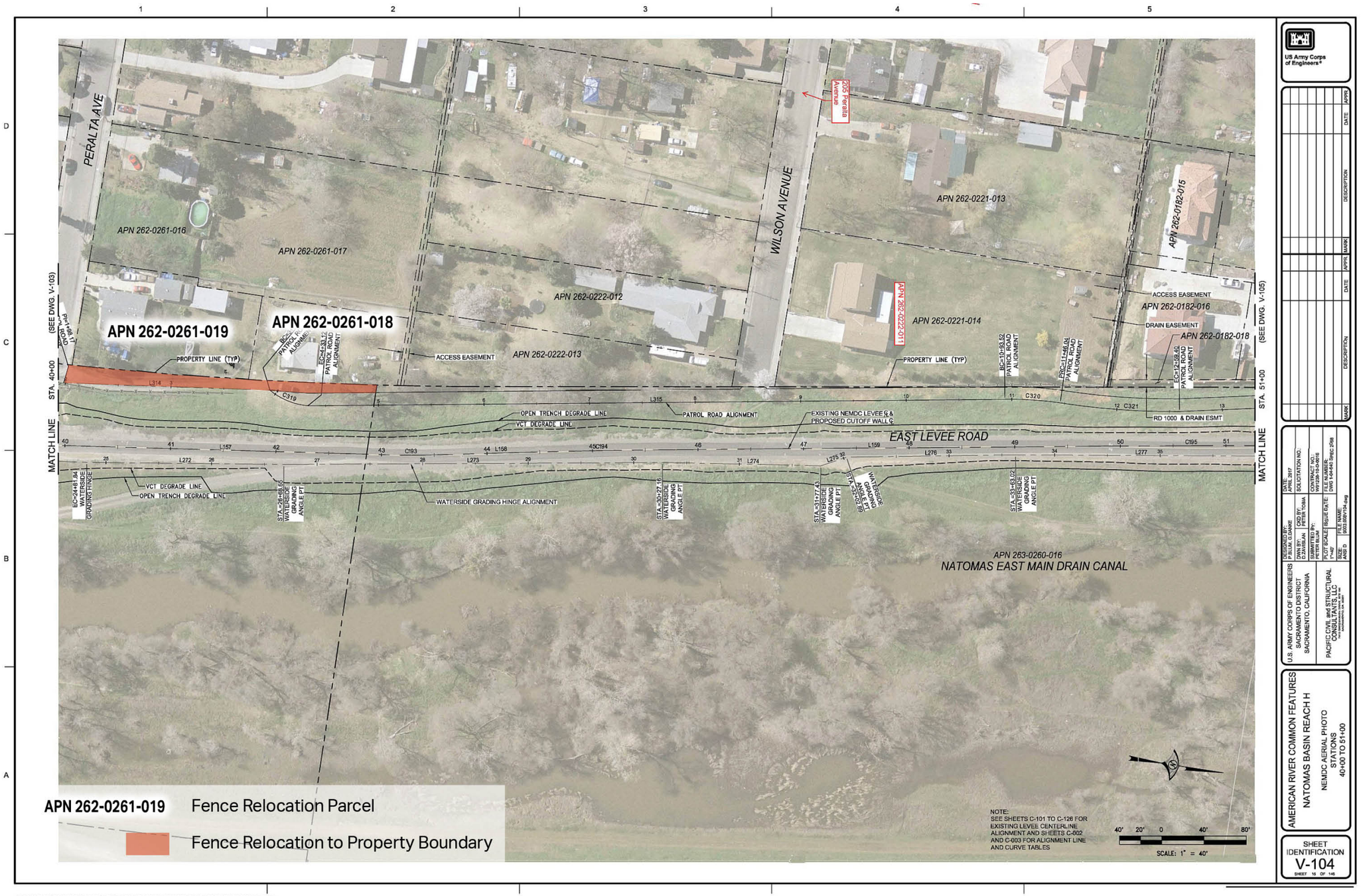
PERALTA AVE
WILSON AVENUE
205 Peralta Avenue
APN 262-0261-016
APN 262-0261-017
APN 262-0222-012
APN 262-0221-013
APN 262-0182-015
APN 262-0222-011
APN 262-0221-014
APN 262-0182-016
APN 262-0182-018
APN 262-0261-019
APN 262-0261-018
APN 262-0222-013
ACCESS EASEMENT
DRAIN EASEMENT
PROPERTY LINE (TYP)
PATROL ROAD ALIGNMENT
OPEN TRENCH DEGRADE LINE
VCT DEGRADE LINE
EXISTING NEMDC LEVEE ℄ & PROPOSED CUTOFF WALL ℄
RD 1000 & DRAIN ESMT
EAST LEVEE ROAD
MATCH LINE
(SEE DWG. V-103)
(SEE DWG. V-105)
STA. 40+00
STA. 51+00
WATERSIDE GRADING HINGE ALIGNMENT
WATERSIDE GRADING ANGLE PT
APN 263-0260-016
NATOMAS EAST MAIN DRAIN CANAL
APN 262-0261-019 Fence Relocation Parcel
Fence Relocation to Property Boundary
NOTE:
SEE SHEETS C-101 TO C-126 FOR EXISTING LEVEE CENTERLINE ALIGNMENT AND SHEETS C-002 AND C-003 FOR ALIGNMENT LINE AND CURVE TABLES
SCALE: 1" = 40'
US Army Corps of Engineers
U.S. ARMY CORPS OF ENGINEERS
SACRAMENTO DISTRICT
SACRAMENTO, CALIFORNIA
PACIFIC CIVIL and STRUCTURAL CONSULTANTS, LLC
AMERICAN RIVER COMMON FEATURES
NATOMAS BASIN REACH H
NEMDC AERIAL PHOTO
STATIONS
40+00 TO 51+00
SHEET IDENTIFICATION
V-104
SHEET 18 OF 146

Plate 13

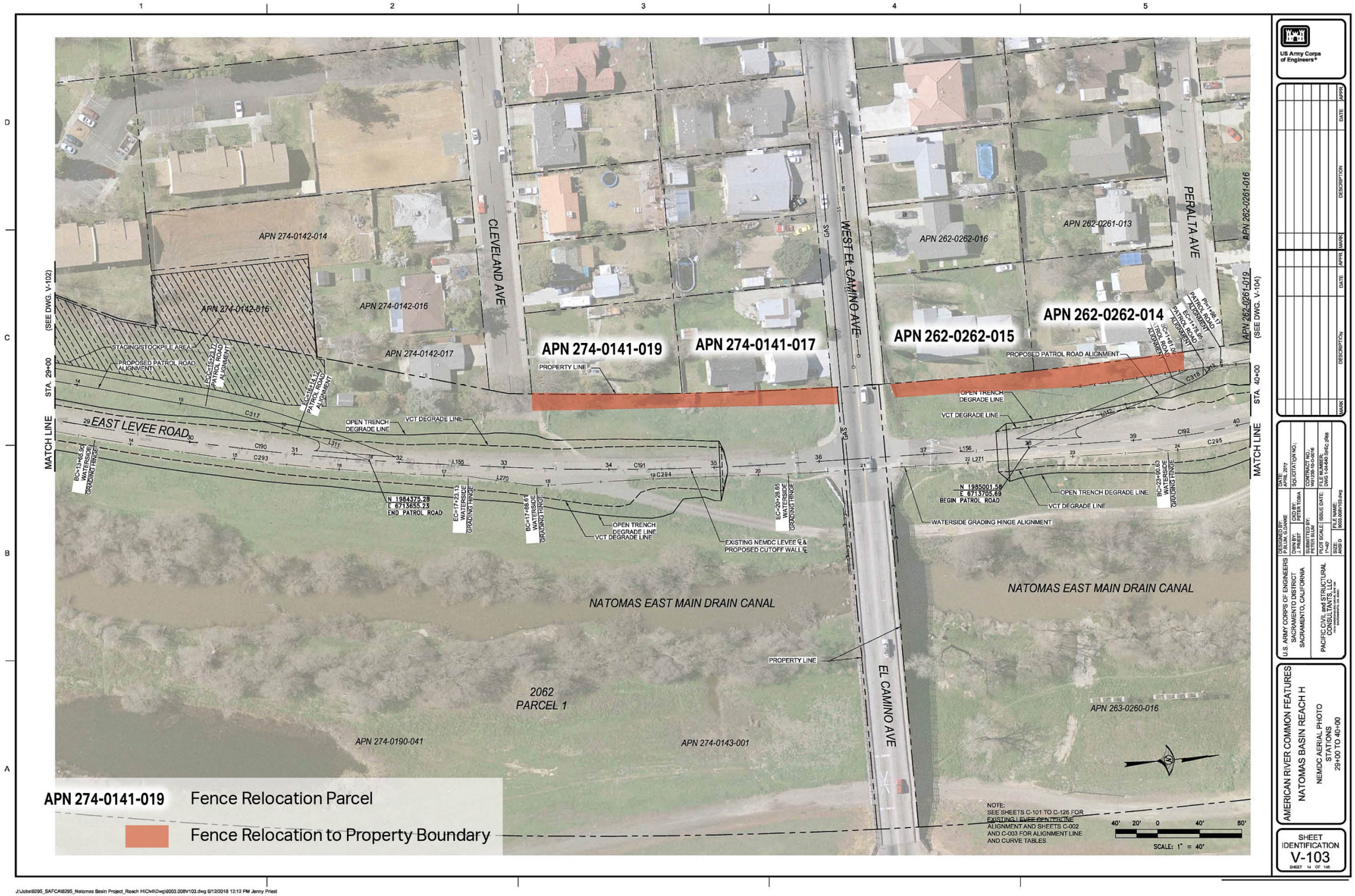
APN 274-0141-019
Fence Relocation Parcel
Fence Relocation to Property Boundary
APN 274-0141-019
APN 274-0141-017
APN 262-0262-015
APN 262-0262-014
APN 274-0142-014
APN 274-0142-015
APN 274-0142-016
APN 274-0142-017
APN 262-0262-016
APN 262-0261-013
APN 262-0261-016
APN 262-0261-019
APN 263-0260-016
APN 274-0190-041
APN 274-0143-001
2062
PARCEL 1
CLEVELAND AVE
WEST EL CAMINO AVE
EL CAMINO AVE
PERALTA AVE
EAST LEVEE ROAD
NATOMAS EAST MAIN DRAIN CANAL
NATOMAS EAST MAIN DRAIN CANAL
MATCH LINE
(SEE DWG. V-102)
STA. 29+00
STA. 40+00
(SEE DWG. V-104)
STAGING/STOCKPILE AREA
PROPOSED PATROL ROAD ALIGNMENT
PROPERTY LINE
OPEN TRENCH DEGRADE LINE
VCT DEGRADE LINE
EXISTING NEMDC LEVEE ℄ & PROPOSED CUTOFF WALL ℄
WATERSIDE GRADING HINGE ALIGNMENT
N 1984375.28
E 6713655.23
END PATROL ROAD
N 1985001.58
E 6713705.69
BEGIN PATROL ROAD
NOTE:
SEE SHEETS C-101 TO C-126 FOR EXISTING LEVEE CENTERLINE ALIGNMENT AND SHEETS C-002 AND C-003 FOR ALIGNMENT LINE AND CURVE TABLES
SCALE: 1" = 40'
US Army Corps of Engineers
AMERICAN RIVER COMMON FEATURES
NATOMAS BASIN REACH H
NEMDC AERIAL PHOTO
STATIONS
29+00 TO 40+00
SHEET IDENTIFICATION
V-103
SHEET 14 OF 146
U.S. ARMY CORPS OF ENGINEERS
SACRAMENTO DISTRICT
SACRAMENTO, CALIFORNIA
PACIFIC CIVIL and STRUCTURAL CONSULTANTS, LLC
DESIGNED BY: P.BLUM, G.GANNE
DATE: APRIL 2017
SOLICITATION NO.:
CONTRACT NO.: W912DR-10-D-0016
FILE NUMBER: [W912DR-10-D-0016]
FILE NAME: 9003.008V103.dwg
SIZE: ANSI D
J:\Jobs\8295_SAFCA\8295_Natomas Basin Project_Reach H\Civil\Dwg\9003.008V103.dwg 6/12/2018 12:12 PM Jenny Priest

Plate 14

APPENDIX B

B1–USFWS Consultation

B2–Updated CNDDB Inventory

APPENDIX C

Emission Estimates for the Reach H Construction Project